Montageanleitung | Instructions de montage Assembly Instructions | Instrucciones de montaje

SKU NUMBER: N636P483983
N636P483984
N636P483985

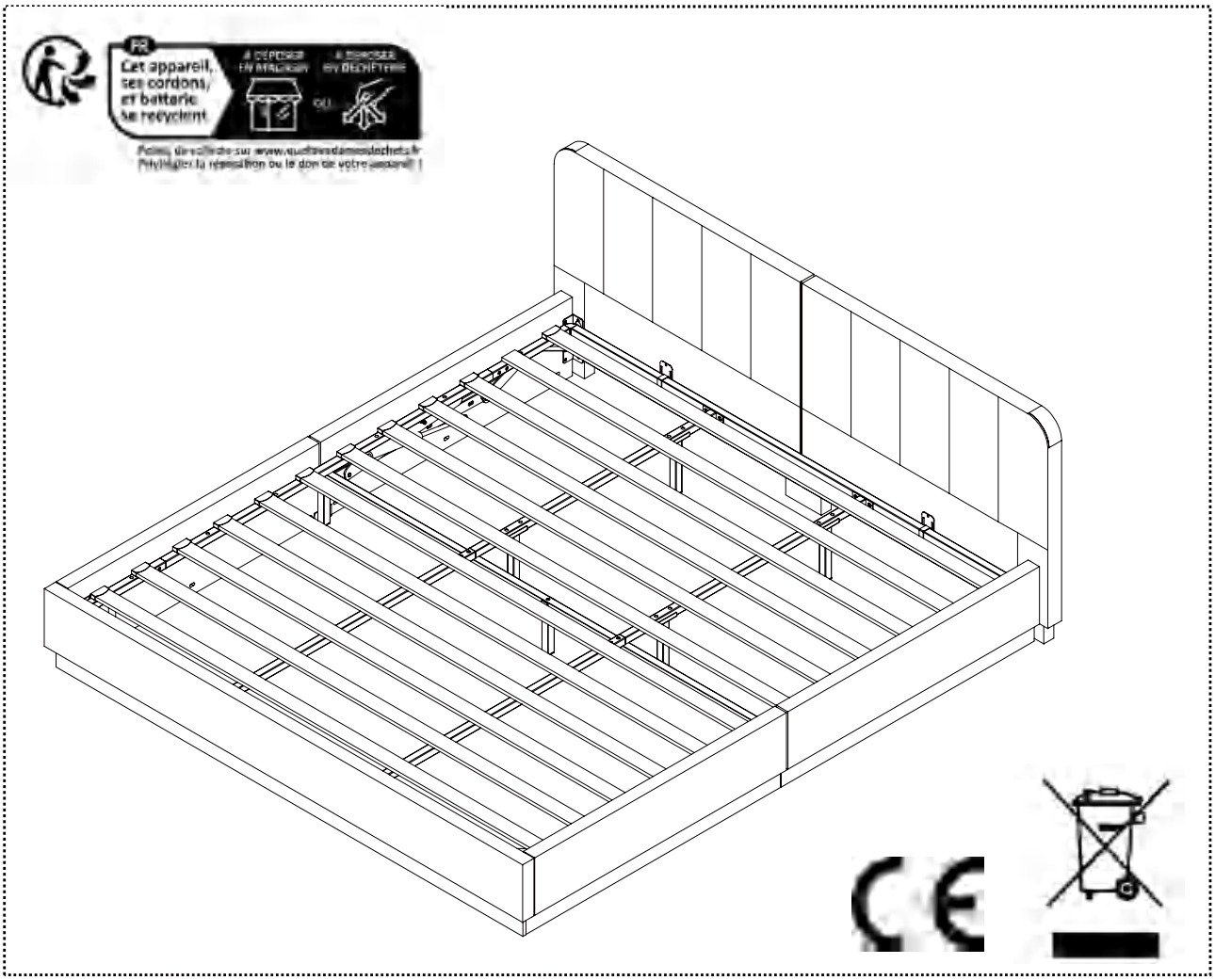

GB This set comes in 3 boxes. If you do not receive a full set of 3 boxes, please contact our customer service.

DE Dieses Set wird in 3 Schachteln geliefert. Wenn Sie nicht ein komplettes Set von 3 Boxen erhalten, kontaktieren Sie bitte unseren Kundenservice.

FR Ce set est livr é en 3 boîtes. Si vous ne recevez pas un jeu complet de 3 boîtes, veuillez contacter notre service client èle.

English

IMPORTANT ! KEEP FOR FUTURE REFERENCE : READ CAREFULLY

- To be assembled by an adult. Assembly must be checked by an adult before use
- WARNING ! Keep all screws, small parts and plastic bags out of the reach of children
- Properly identify all parts before assembling
- Never use your item if any of its parts are broken or missing
- Should any problems arise, please contact our After Sales Service
- Manufacturer's instructions shall be followed at all times
- Care: Clean with a soft, dry cloth. In case of larger stains, carefully rub with a slightly damp, non-abrasive sponge
- Avoid the risk of fire by not placing furniture near sources of ignition or hot items
- Do not jump on the bed

Deutsch

WICHTIG ! ZUM SPÄTEREN NACHSCHLAGEN AUFBEWAHREN: SORGFÄLTIG LESEN

- Muss von einem Erwachsenen zusammengebaut werden.Der Zusammenbau muss vor dem Gebrauch von einem Erwachsenen uberpruft werden
- WARNUNG! Bewahren Sie alle Schrauben, Kleinteile und Plastikbeutel außerhalb der Reichweite von Kindern auf
- Kennzeichnen Sie vor dem Zusammenbau alle Teile richtig
- Benutzen Sie Ihren Artikel niemals, wenn Teile gebrochen sind oder fehlen
- Sollten Probleme auftreten, wenden Sie sich bitte an unseren Kundendienst
- Die Anweisungen des Herstellers sind stets zu befolgen
- Pflege: Mit einem weichen, trockenen Tuch reinigen. Bei größeren Flecken vorsichtig mit einem leicht feuchten, nicht scheuernden Schwamm abreiben. nicht scheuernden Schwamm
- Vermeiden Sie die Gefahr eines Brandes, indem Sie die Möbel nicht in der Nähe von Zundquellen oder heißen Gegenständen aufstellen
- Nicht auf das Bett springen

Français

IMPORTANT ! CONSERVER POUR RÉFÉRENCE ULTÉRIEURE : LIRE ATTENTIVEMENT

- Le montage doit être effectué par un adulte. Le montage doit être vérifié par un adulte avant Utilisation
- ATTENTION ! Tenir les vis, les petites pièces et les sachets en plastique hors de portée des enfants
- Identifiez correctement toutes les pièces avant de les assembler
- N'utilisez jamais votre article si l'une de ses pièces est cassée ou manquante
- En cas de problème, veuillez contacter notre service après-vente
- Les instructions du fabricant doivent être respectées à tout moment
- Entretien : nettoyer avec un chiffon doux et sec. En cas de taches plus importantes, frotter soigneusement avec une éponge non abrasive légèrement humide. légèrement humide et non Abrasive
- Évitez les risques d'incendie en ne plaçant pas les meubles à proximité de sources d'inflammation ou d'objets chauds
- Ne pas sauter sur le lit

Italiano

IMPORTANTE! CONSERVARE PER RIFERIMENTO FUTURO: LEGGERE ATTENTAMENTE

- Deve essere assemblato da un adulto. L'assemblaggio deve essere controllato da un adulto prima dell'uso
- ATTENZIONE! Tenere tutte le viti, le piccole parti e i sacchetti di plastica fuori dalla portata dei bambini
- Identificare correttamente tutte le parti prima dell'assemblaggio
- Non utilizzare mai l'articolo se alcune parti sono rotte o mancanti
- In caso di problemi, si prega di contattare il nostro Servizio Post Vendita
- Le istruzioni del produttore devono essere sempre seguite
- Cura: Pulire con un panno morbido e asciutto. In caso di macchie più estese, strofinare accuratamente con una spugna leggermente umida e nonspugna leggermente umida e non abrasiva
- Evitare il rischio di incendio, non collocando i mobili vicino a fonti di accensione o a oggetti caldi
- Non saltare sul letto

Español

¡ IMPORTANTE ! CONSÉRVELO PARA FUTURAS CONSULTAS: LEA ATENTAMENTE

- Debe ser montado por un adulto. El montaje debe ser comprobado por un adulto antes del uso

ADVERTENCIA Mantenga todos los tornillos, piezas pequeñas y bolsas de plástico fuera del alcance de los niños.

- Identifique correctamente todas las piezas antes de montarlas
- Nunca utilice su artí culo si alguna de sus piezas está rota o falta
- Si surge algún problema, póngase en contacto con nuestro Servicio Postventa
- Las instrucciones del fabricante deben seguirse en todo momento
- Cuidado: Limpiar con un paño suave y seco. En caso de manchas más grandes, frote cuidadosamente con una esponja no abrasiva ligeramente humedecida.
- Evite el riesgo de incendio no colocando los muebles cerca de fuentes de ignicón u objetos calientes.
- No saltar sobre la cama.

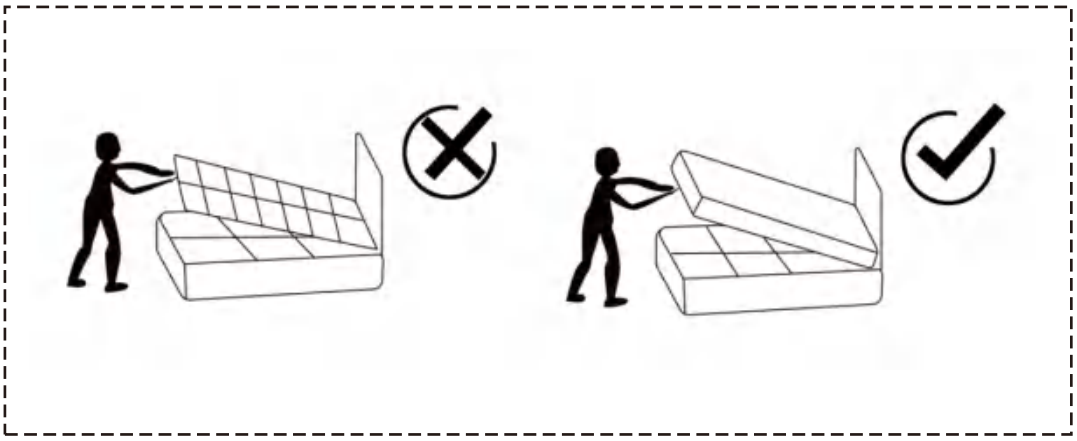

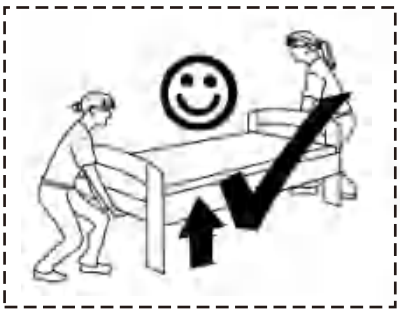

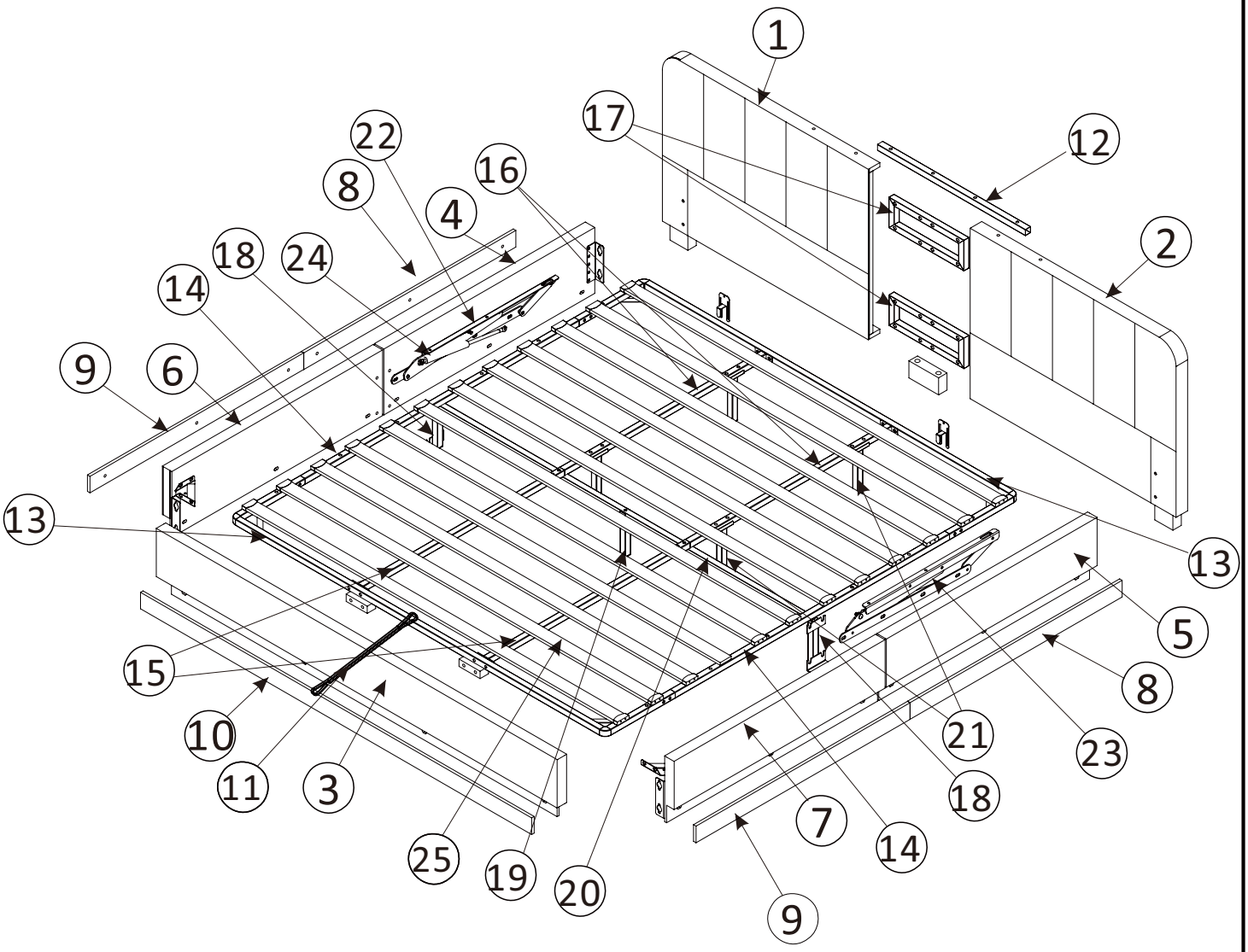
1
17
12
22
16
8
4
2
18
24
14
9
6
13
13
5
15
8
10
21
23
11
3
18
7
14
25
19
20
9

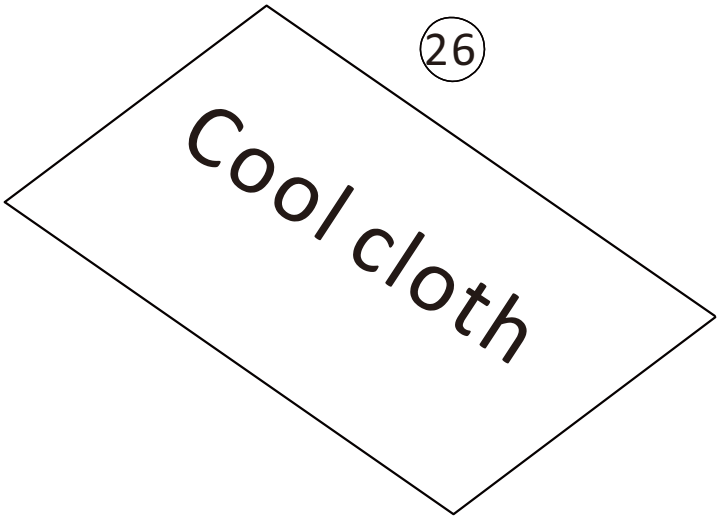
26
Cool cloth

SKU NUMBER: N636P483983

1	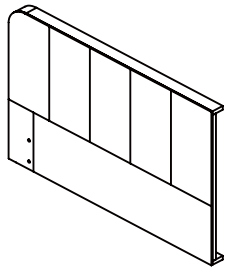	X1
2	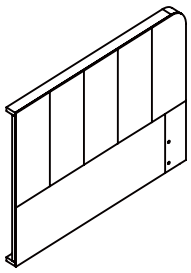	X1
4	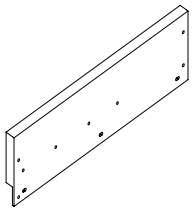	X1
5	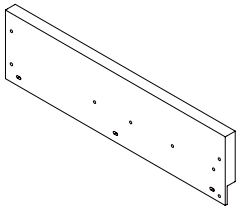	X1

22	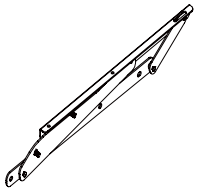	X1
23	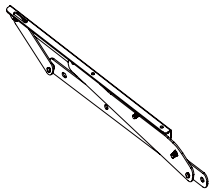	X1
24	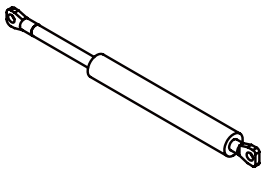	X2

SKU NUMBER: N636P483984

3	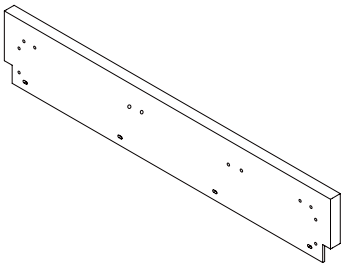	X1
10	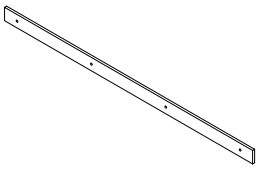	X1

12	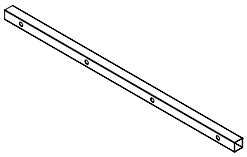	X1
13	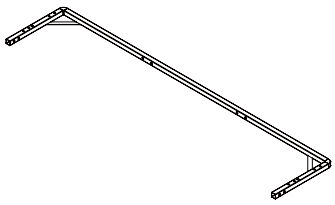	X2

14	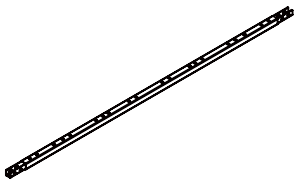	X2
17	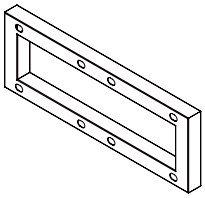	X2
26	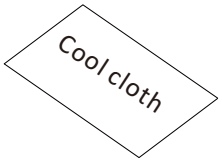	X1

20	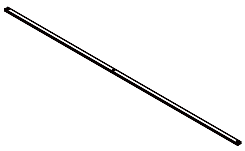	X1
25	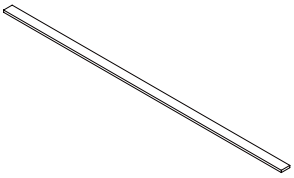	X12

SKU NUMBER: N636P483985

6	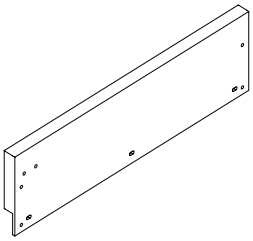	X1
7	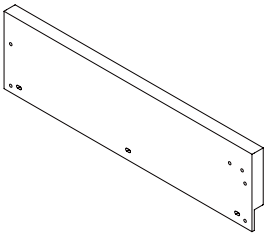	X1
8	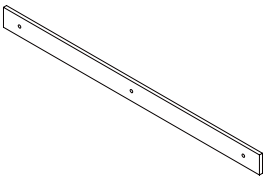	X2

9	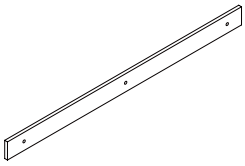	X2
11		X1
15	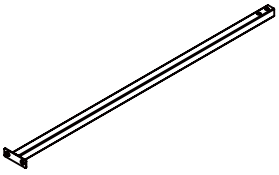	X2

16	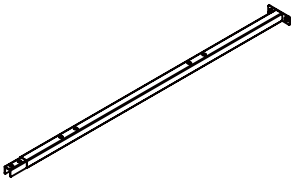	X2	19		X1
18		X2	21		X4

SKU NUMBER: N636P483985

Hardware List -Hardware-Liste-Liste dumatériel

A	M8*12	X40	C	M8*18	X39	E	M8*40	X34
F	M8*55	X8	G	M8	X10	S		X1
H	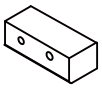	X2	I	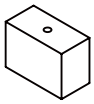	X2	J	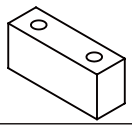	X1
K		X24	L		X2	M		X2
N		X2	O	H150	X4	P		X1
Q	Adaptor 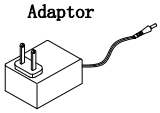	X1	R		X1			

1	M8*40	M8*55			
				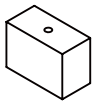	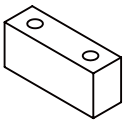
	E x 4pcs	F x 4pcs	S x1pc	I x 2pcs	J x 1pcs

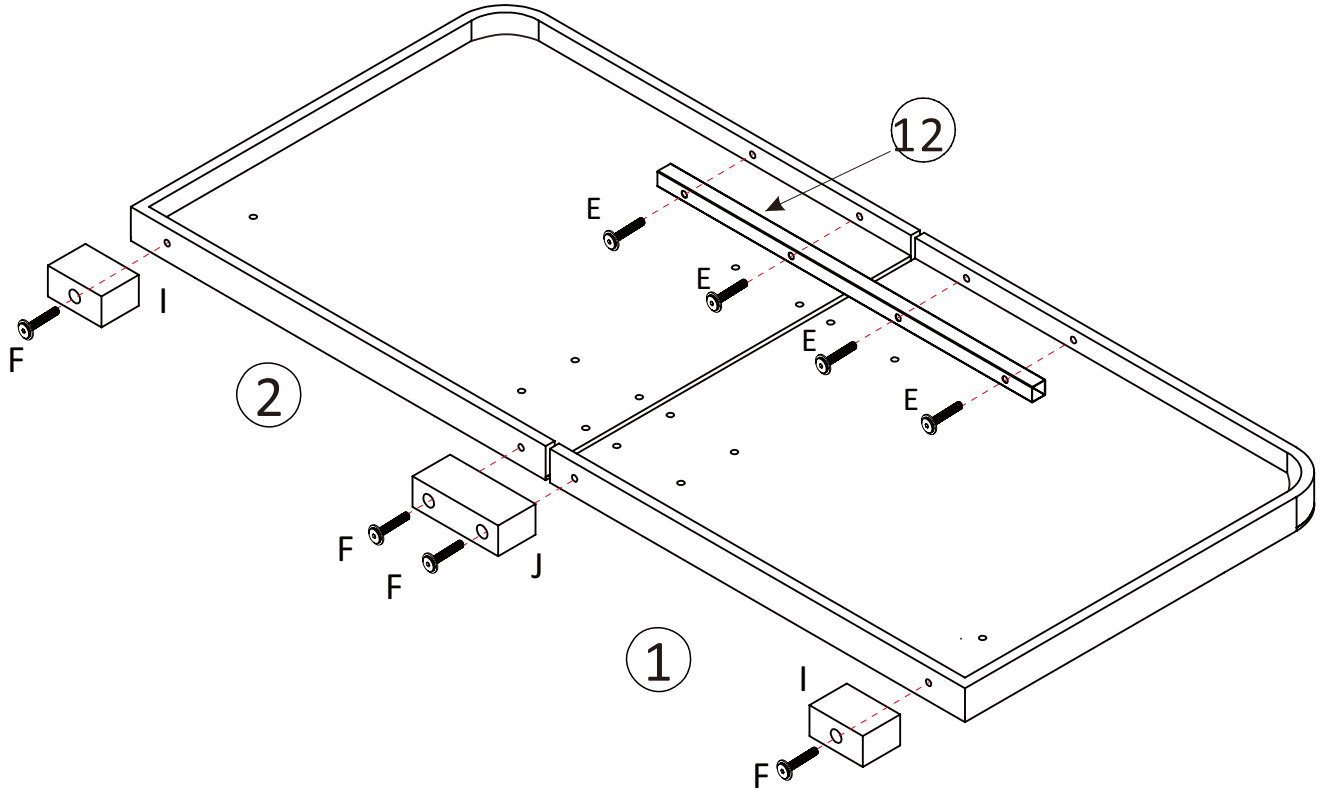

2	M8*40	
	E x 16pcs	S x1pc

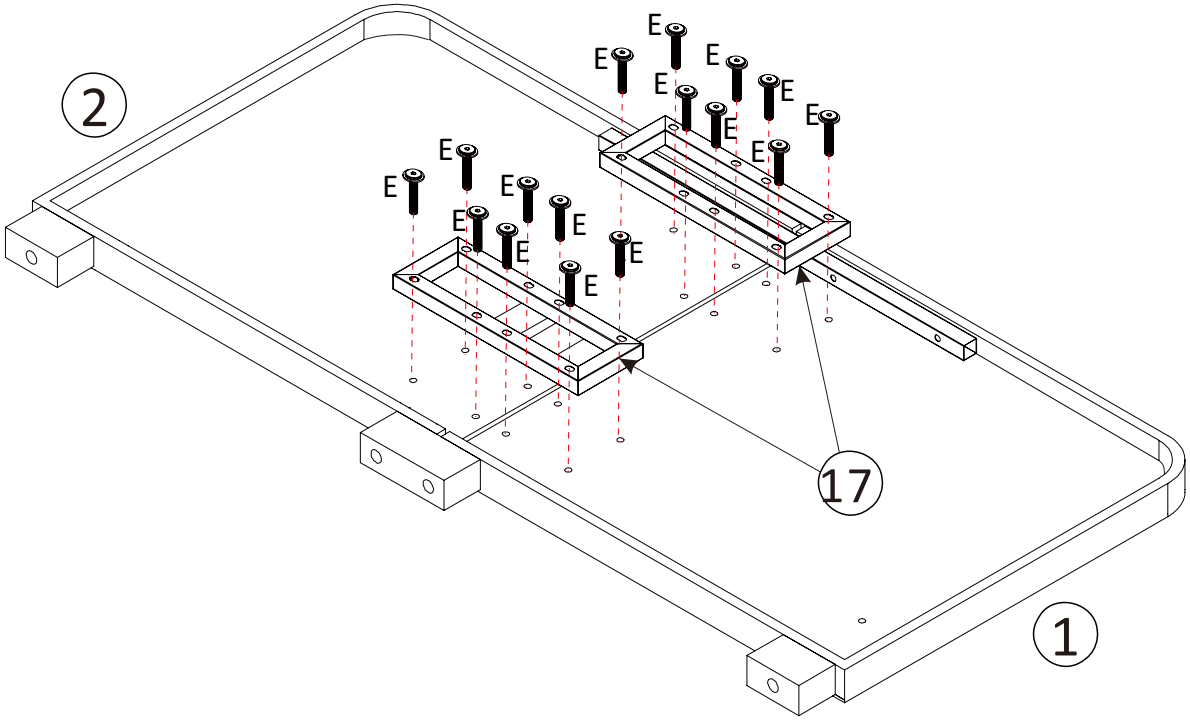

3

M8*18	
C x 6pcs	S x 1pc

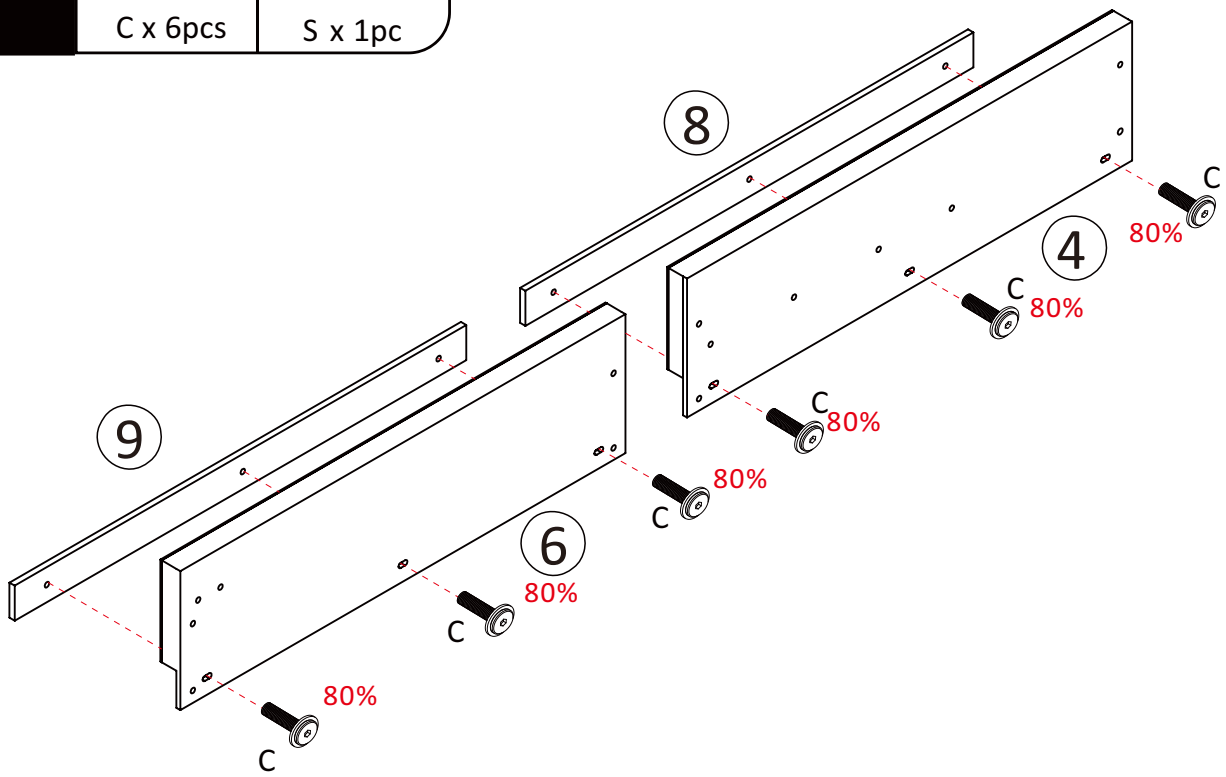

For this step, please secure 80% of the screws.

4

M8*18	
C x 6pcs	S x 1pc

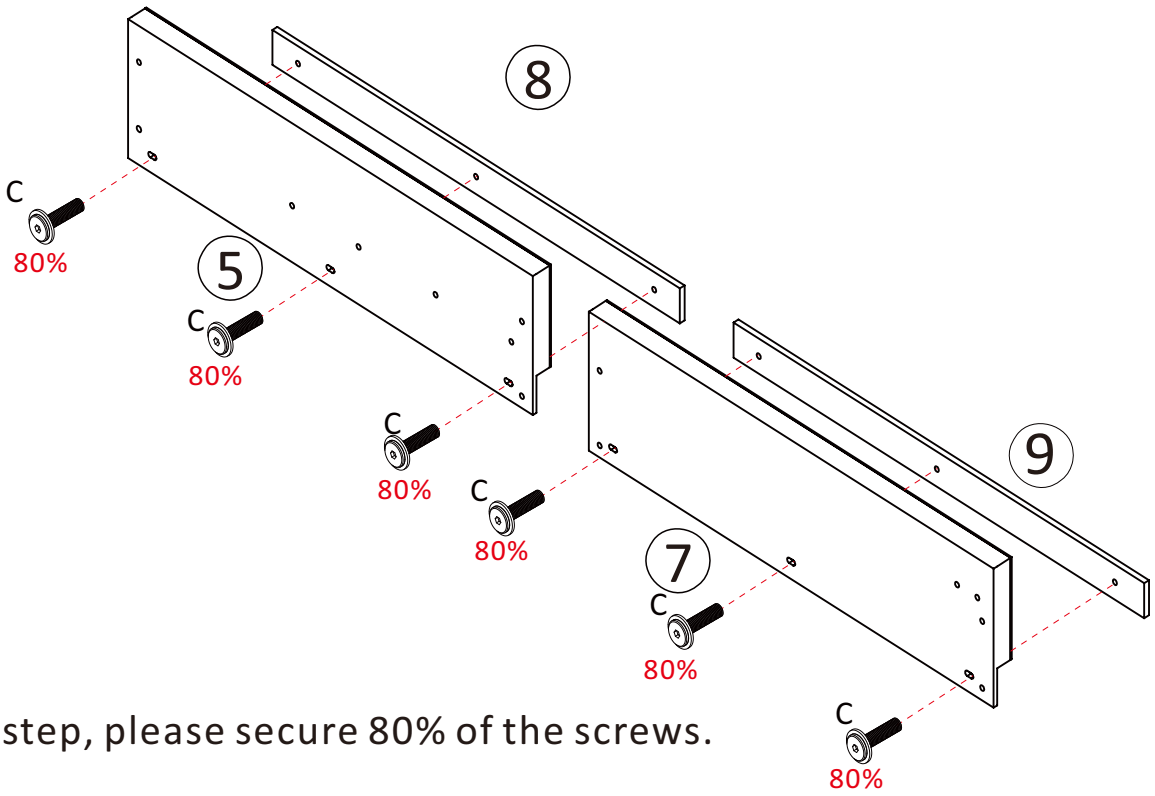

For this step, please secure 80% of the screws.

5	M8*18	M8*55		
	C x 4pcs	F x 4pcs	S x 1pc	H x 2pcs

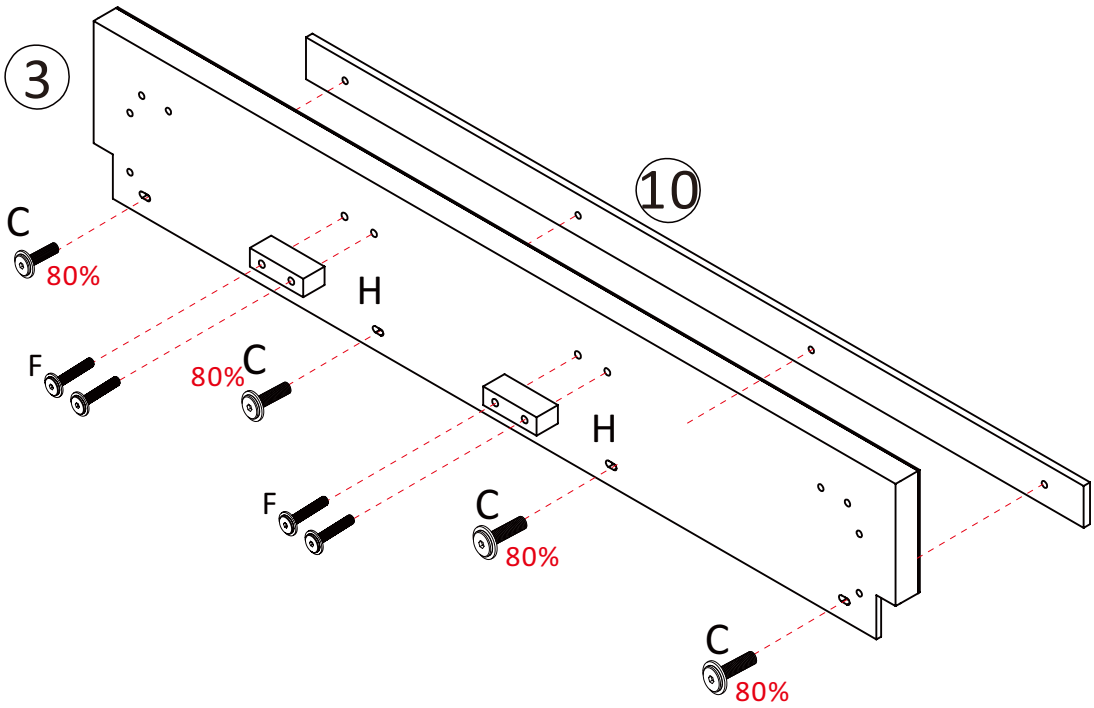

6	M8*12		
	A x 8pcs	S x 1pc	O x 2pcs

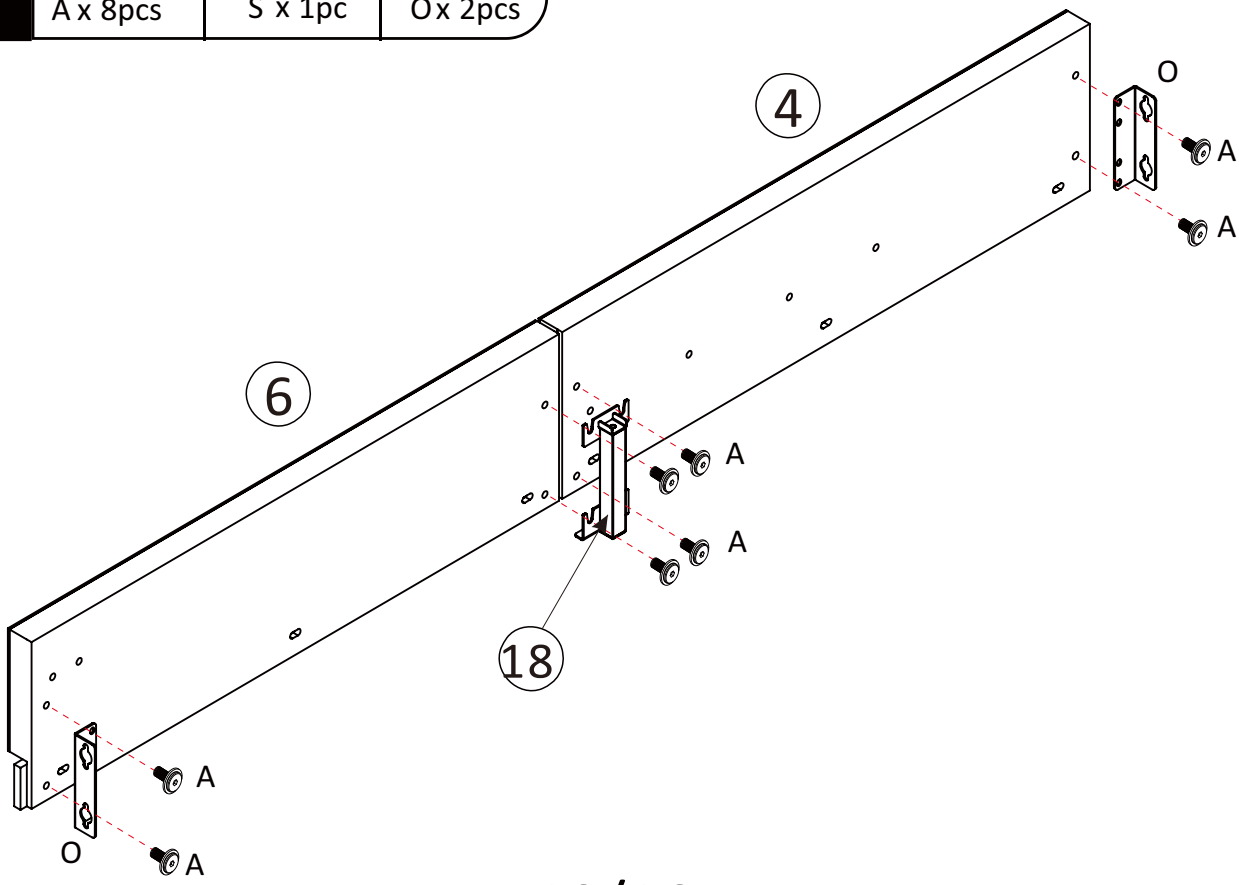

7

M8*12		
A x 8pcs	S x 1pc	O x 2pcs

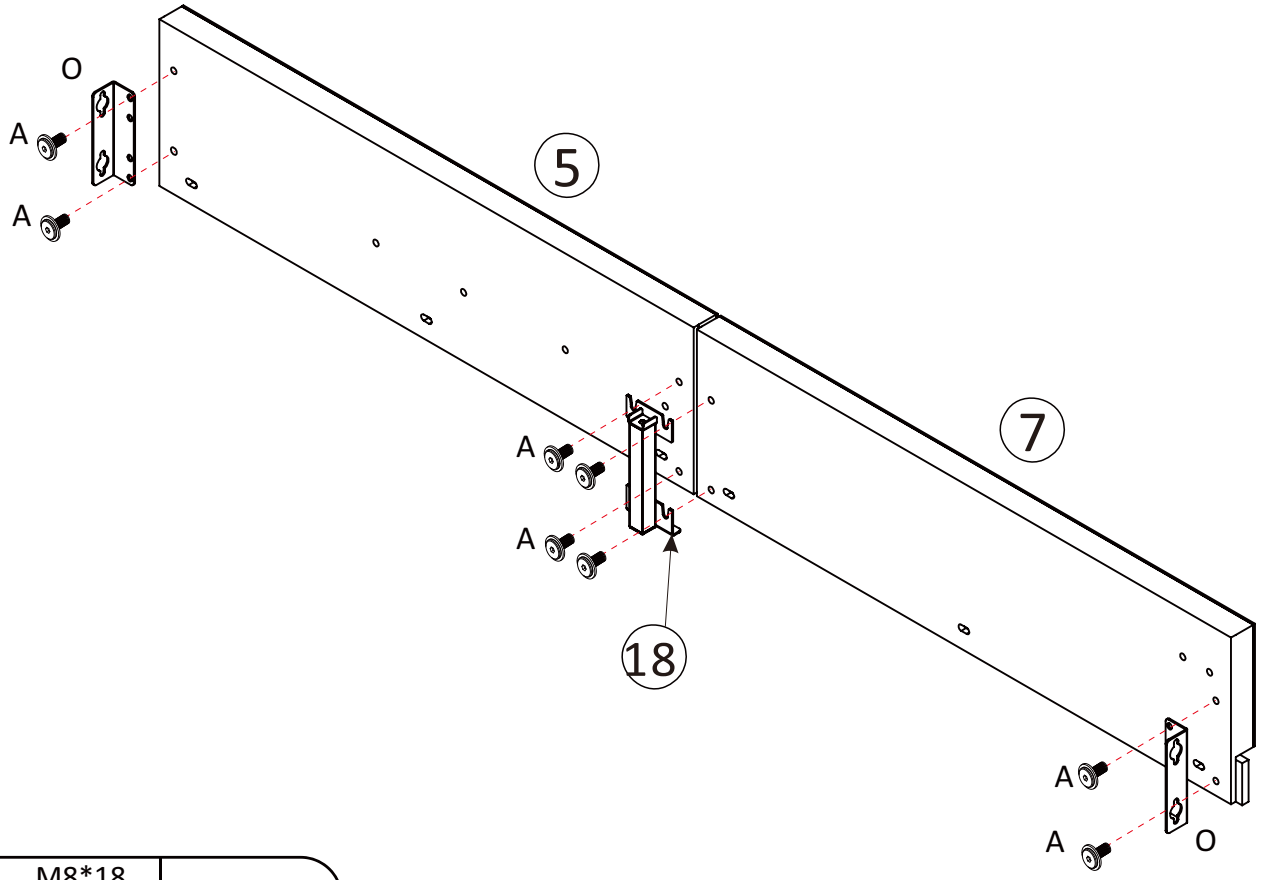

8

M8*18	
C x 8pcs	S x 1pc

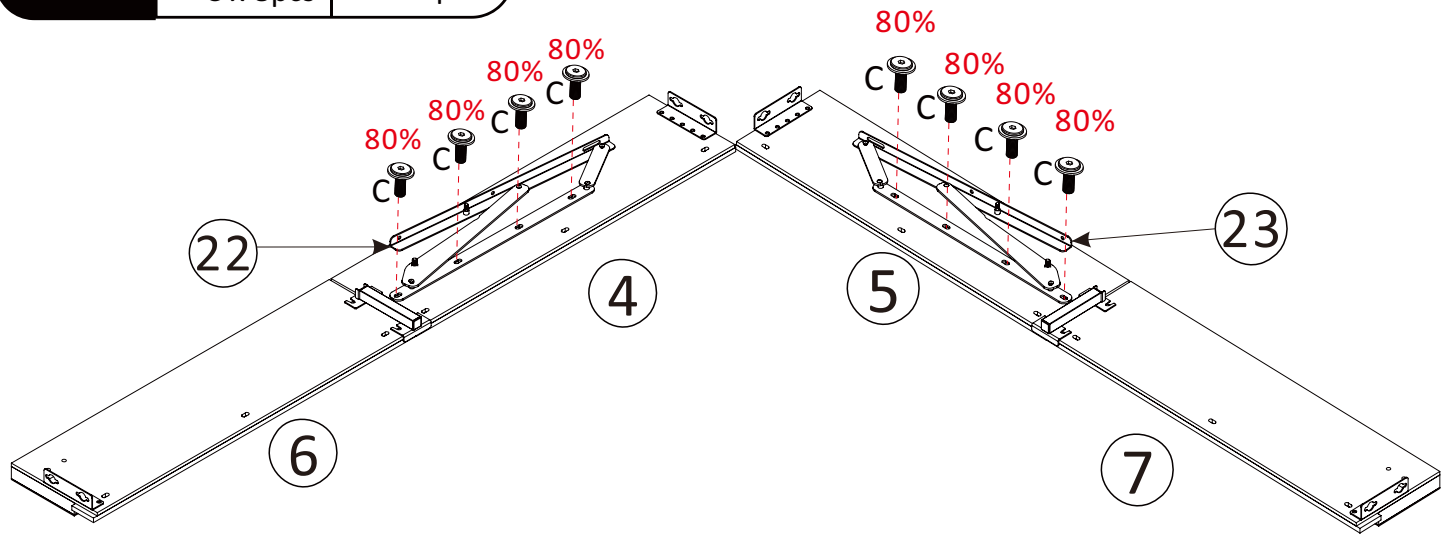

For this step, please secure 80% of the screws.

9	M8*18		M8*12
	C x 4pcs	S x 1pc	A x 4pcs

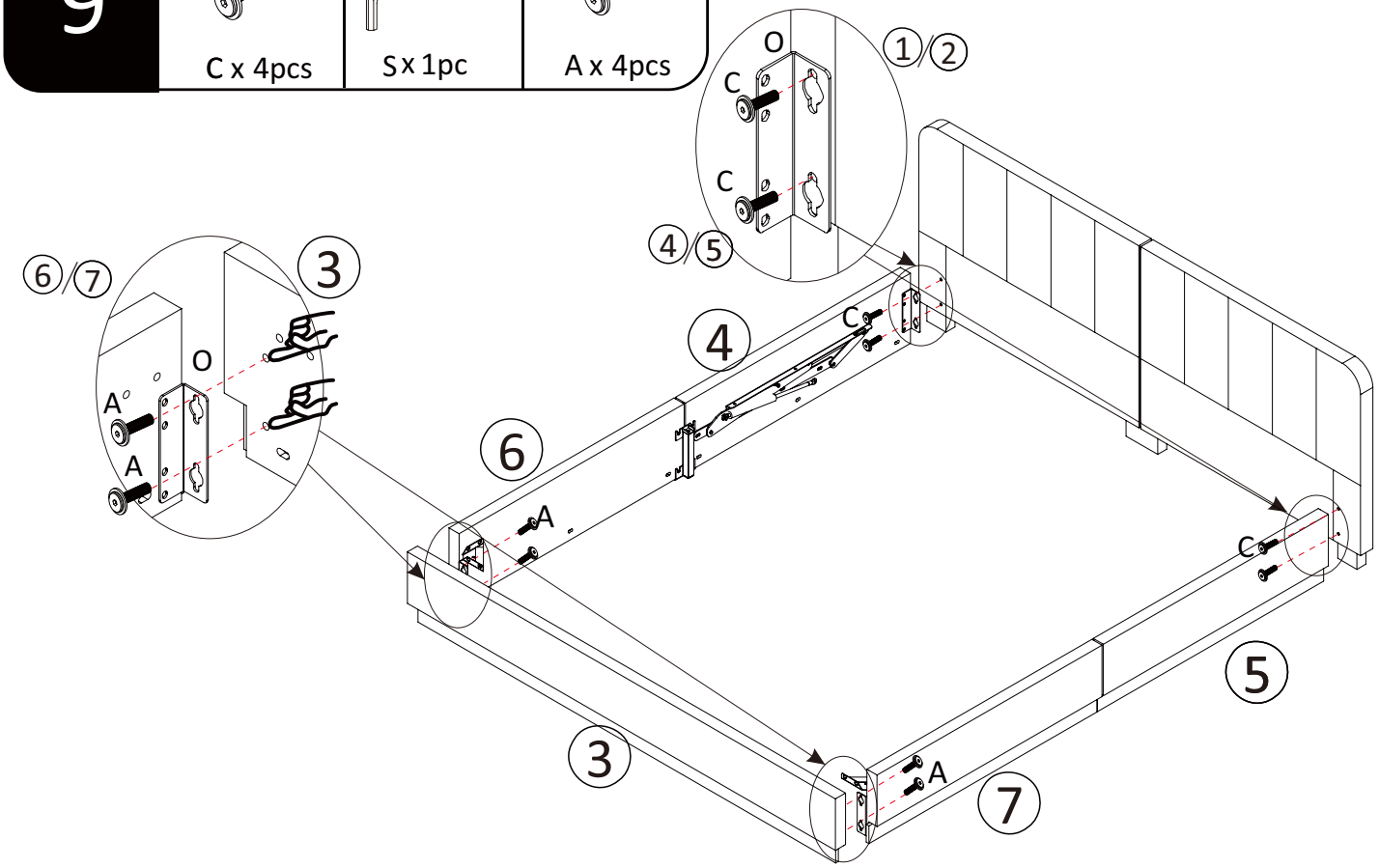

10	M8*18			
	C x 11pcs	S x 1pc	Mx 2pcs	L x 2pcs

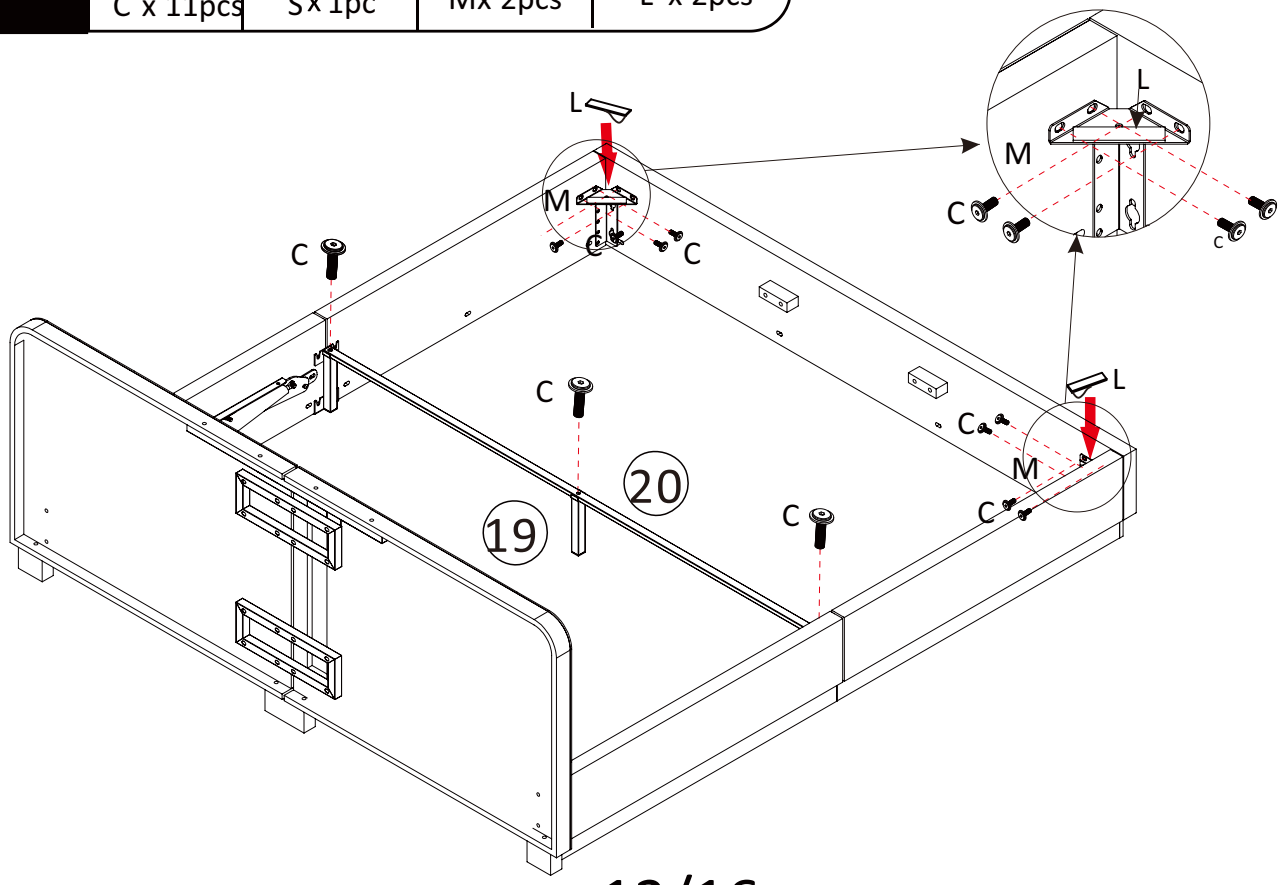

11

S x 1pc

Move the 8/9/10 components to minimize the gaps between them, and then tighten the screws.

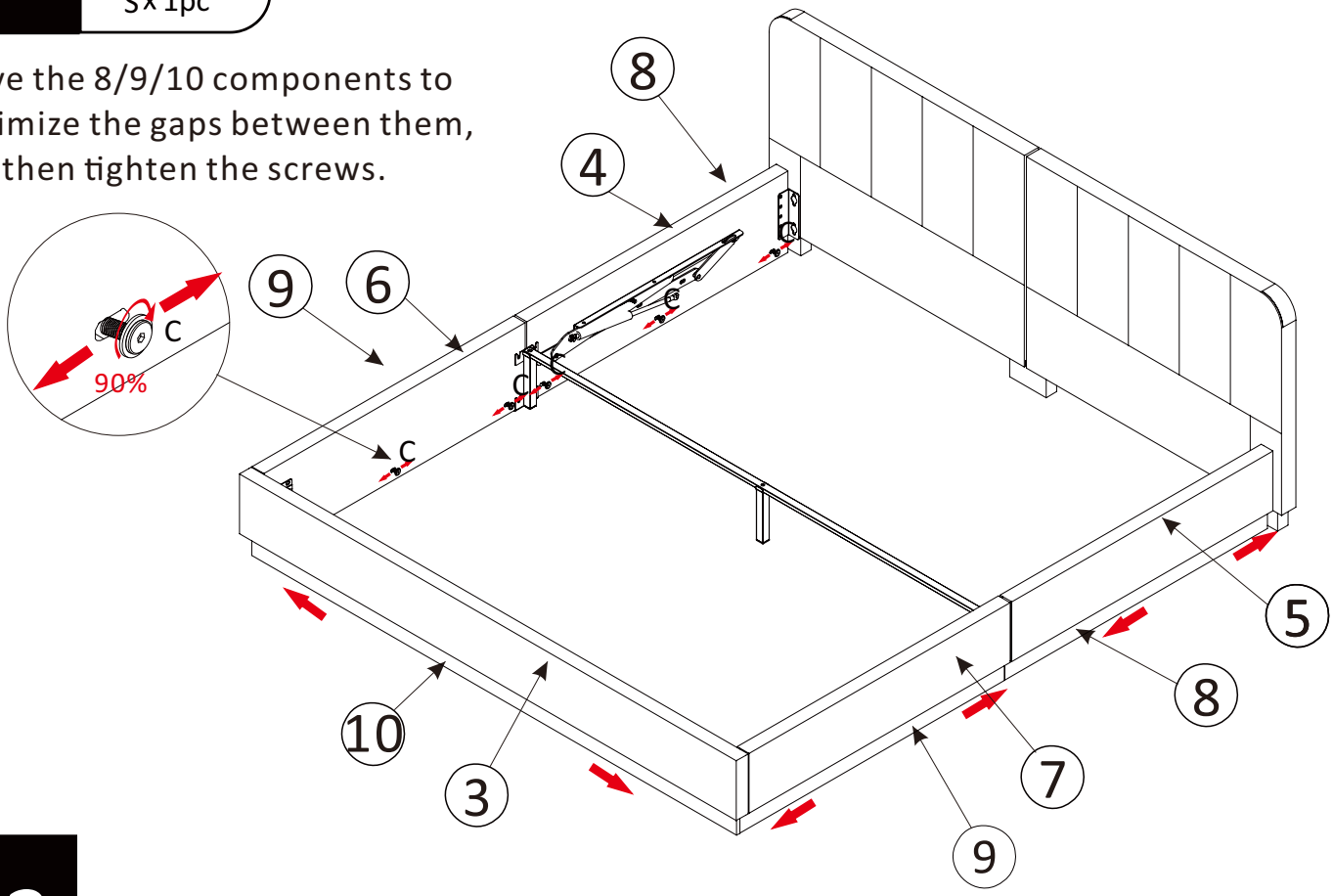

12

Attach the component numbered 26 to the velcro position on the bed surface in a flat and even manner.

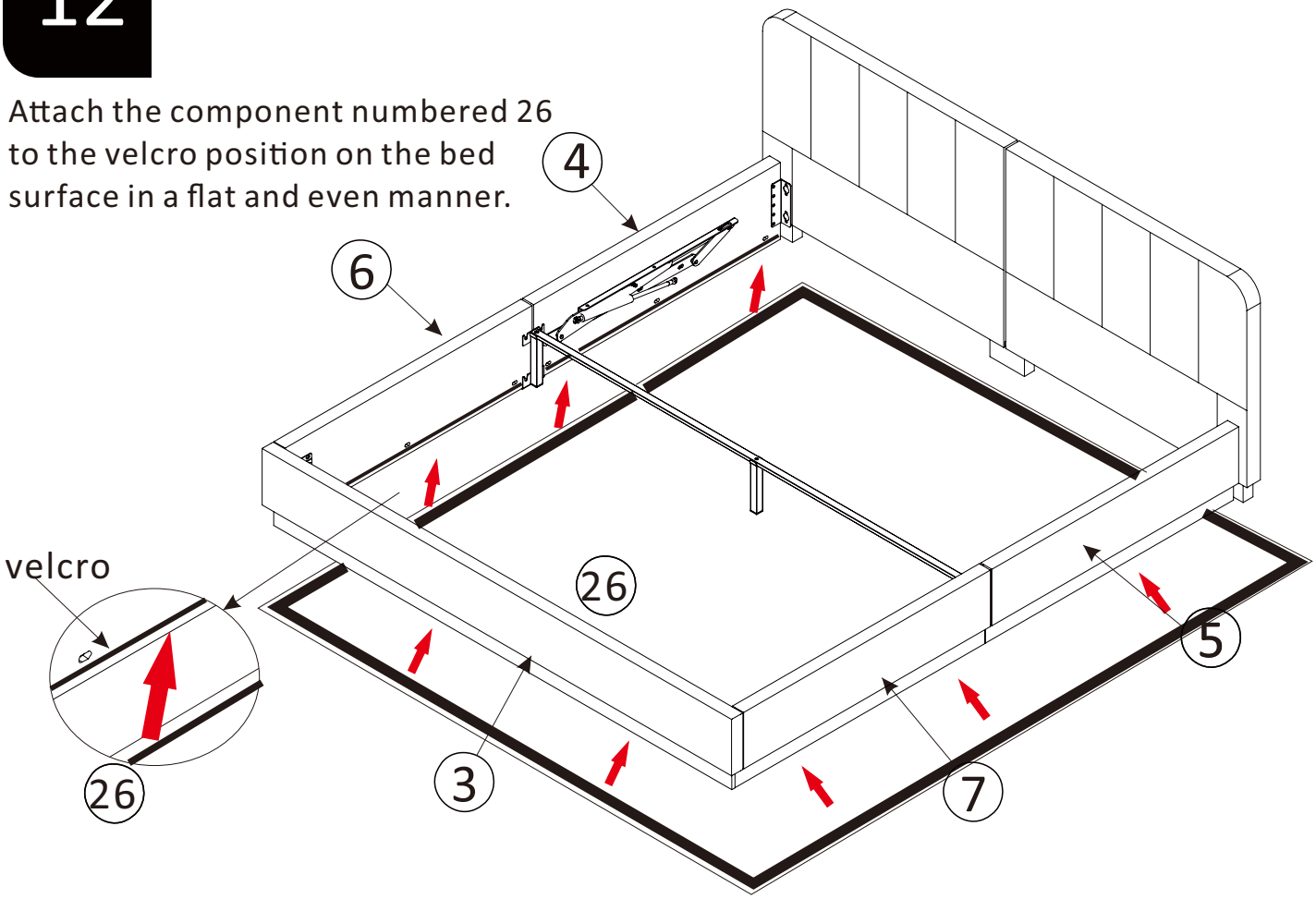

13

M8*12	
A x 20pcs	S x 1pc

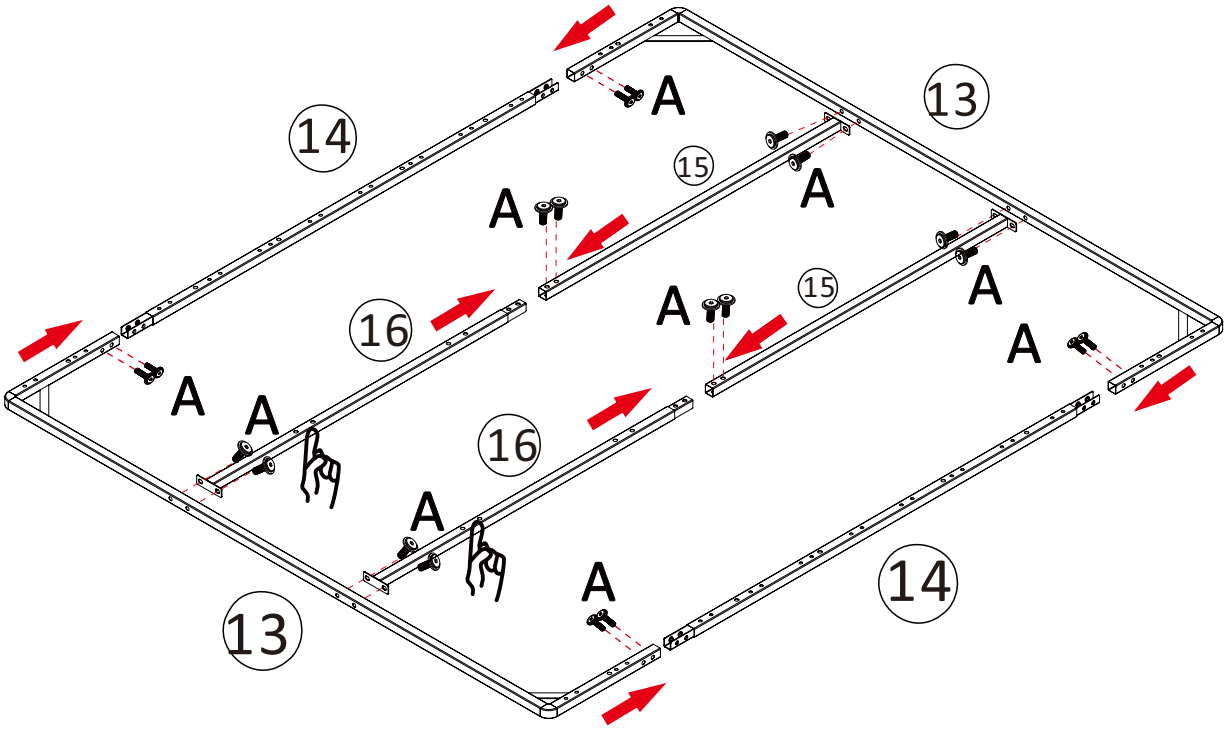

14

M8*40			M8
E x 6pcs	S x 1pc	R x 1pc	G x 6pcs

EN:After installation, adjust the spacing properly and tighten all the B screws.

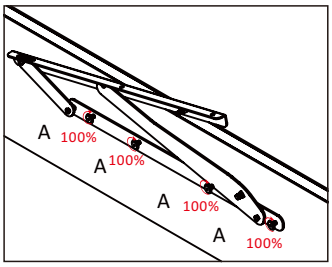

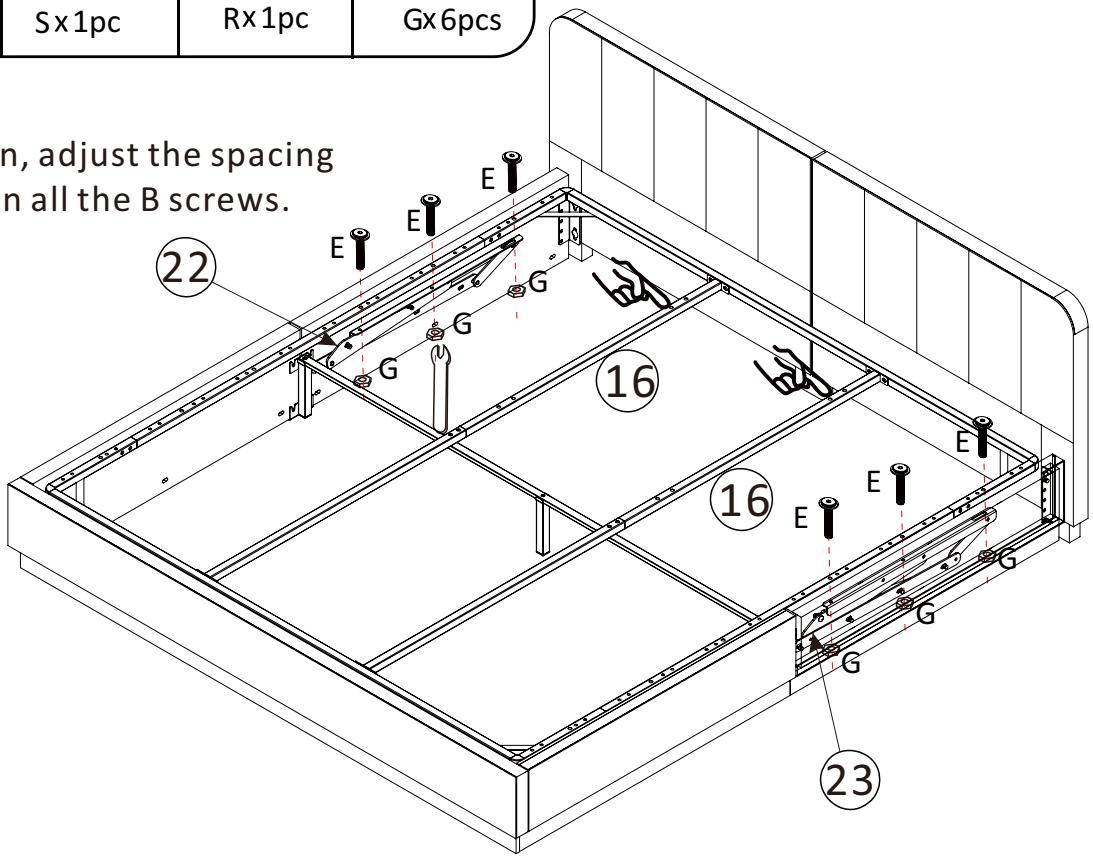

15

M8*40

E x 8pcs

S x 1pc

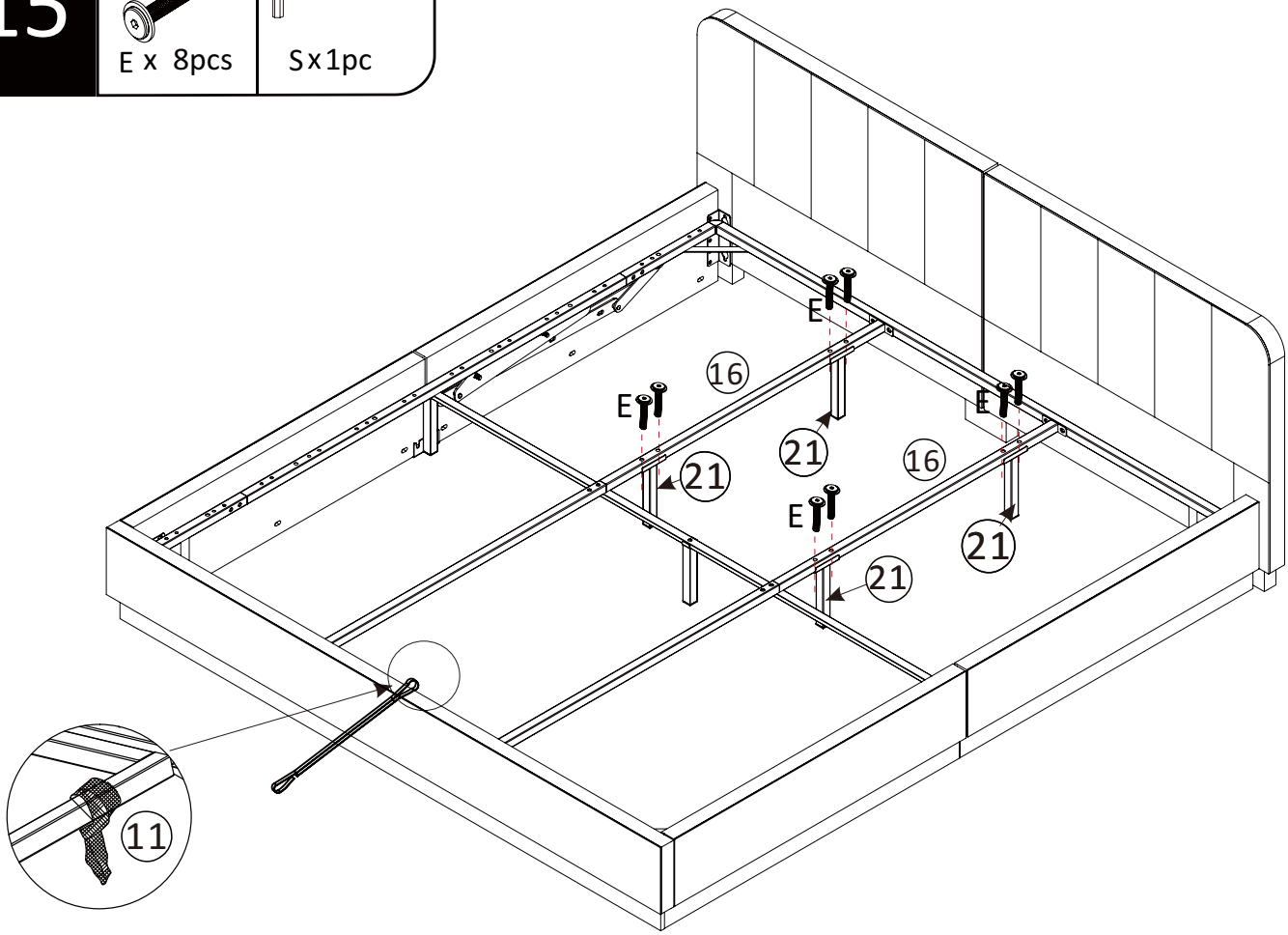

16

M8

G x 4pcs

S x 1pc

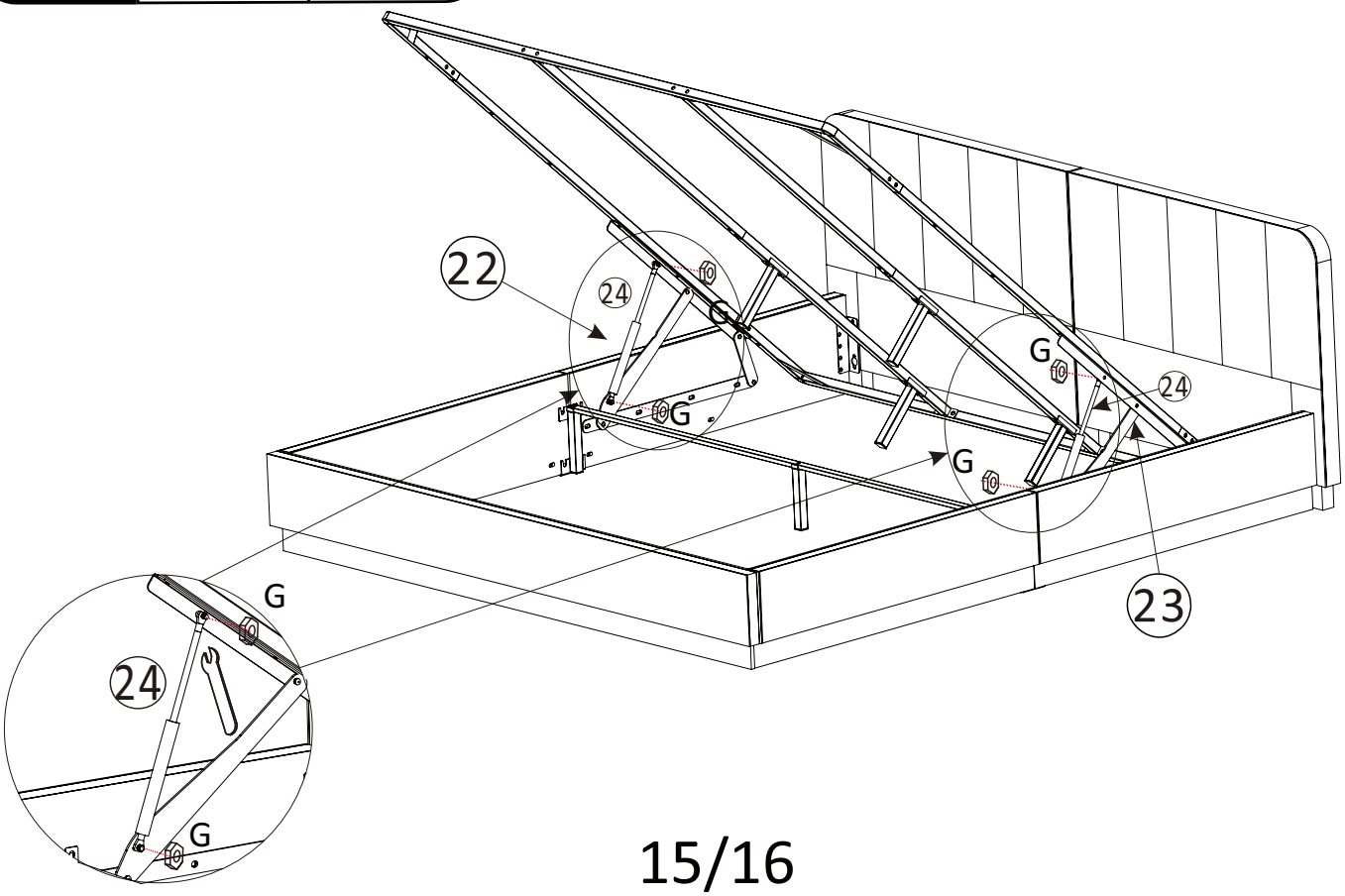

17

K x 24pcs

N x 2pcs

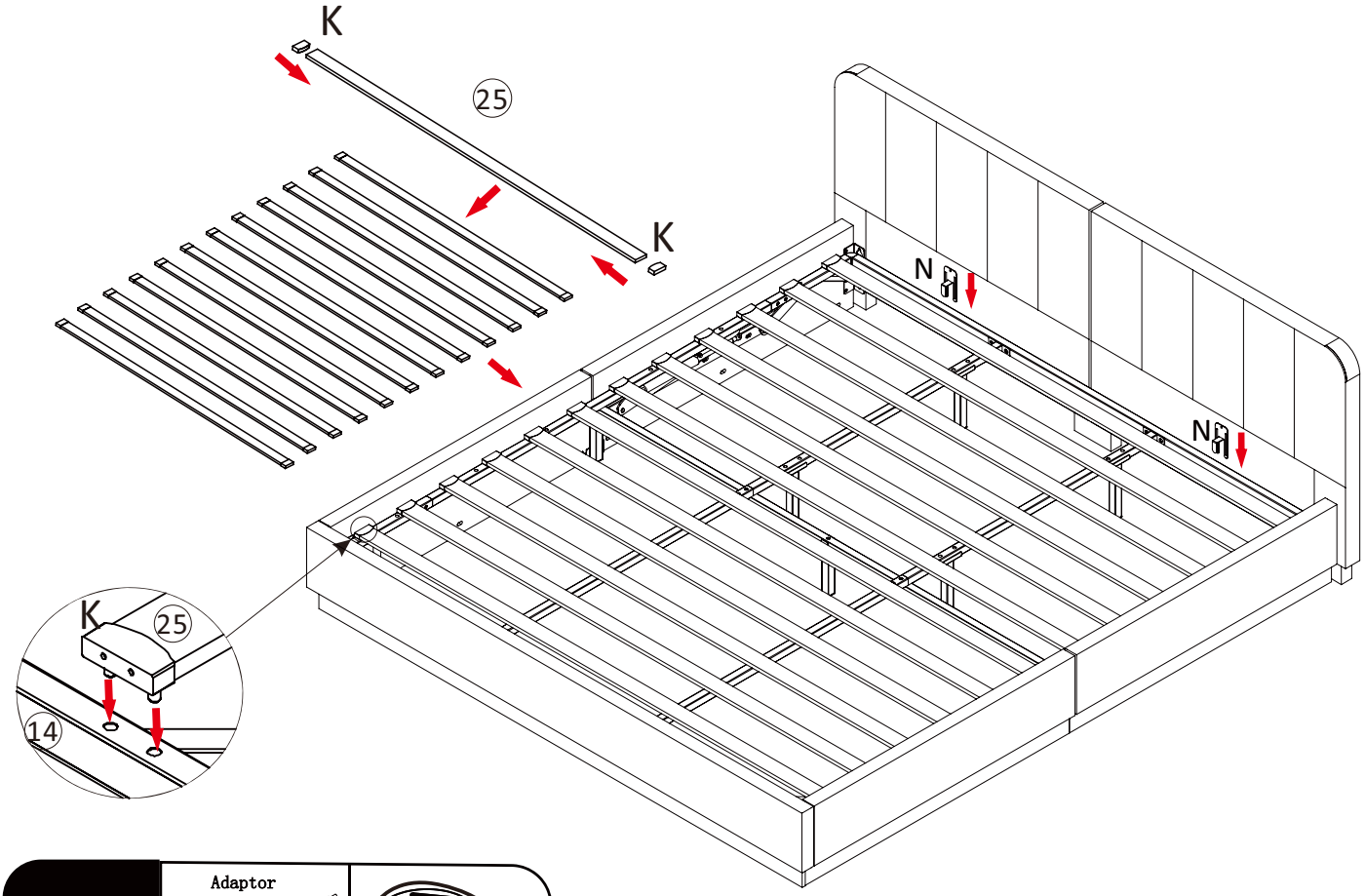

18

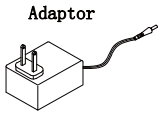

Q x 1pc

P x 1pc

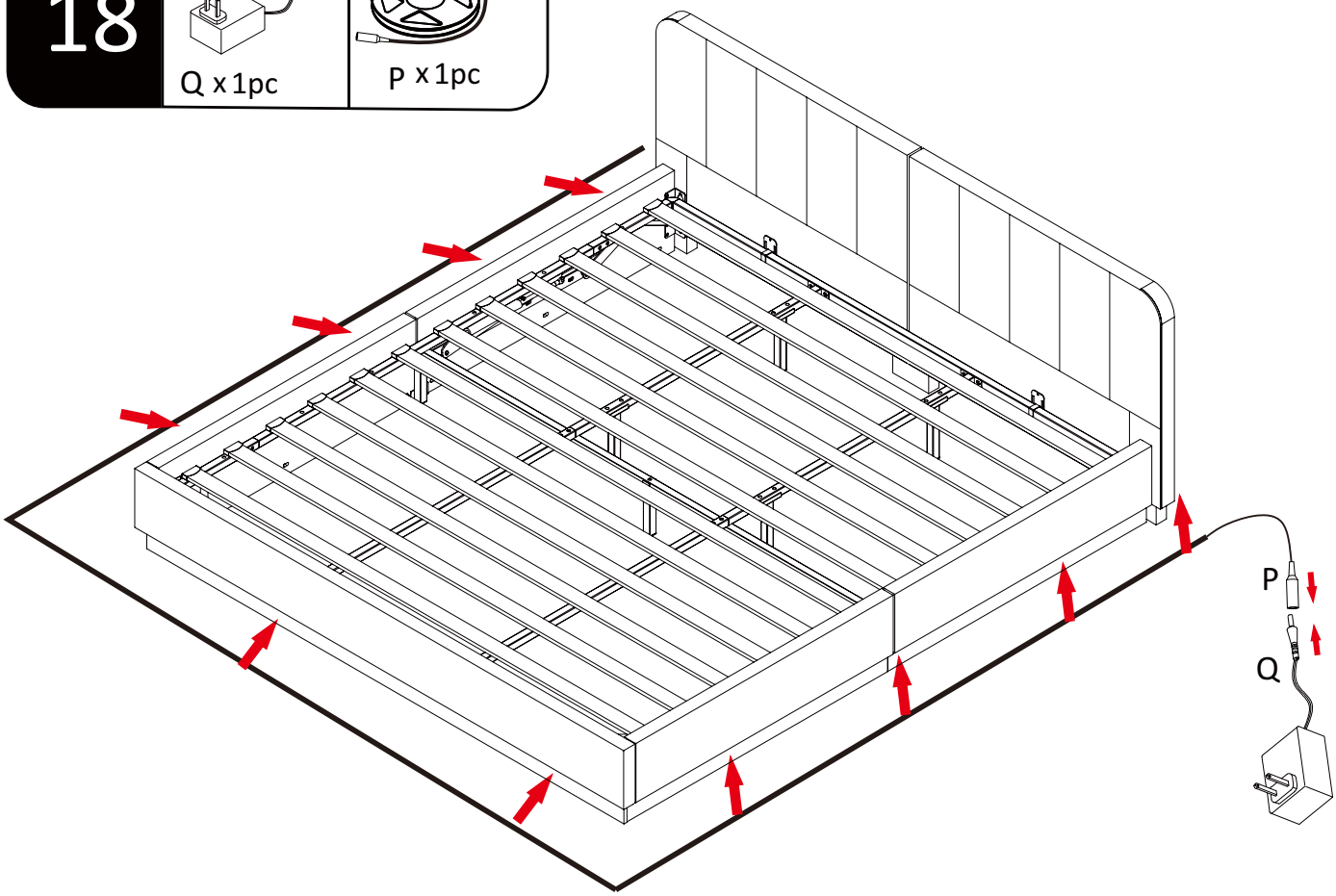

★ IMPORTANT NOTICE ★

HYDRAULIC BED OPERATING INSTRUCTIONS

Once your bed frame is completely assembled, the slat unit will not operate correctly unless a mattress is placed on the slat frame. Position the mattress on the slat frame whilst it is in the closed position.
PLEASE NOTE –It takes a lot of force to make the initial movement of the ottoman. This is a design feature of the product so that it does not fall shut the nearer to being closed the ottoman is, the easier it is to move. When the ottoman is al most shut, it will close completely under its own weight.
When lowering the slat unit for the first time, take care to make sure it does not rub unevenly on the inside face of the side rails. If it does, the bed has been assembled slightly out of square. This can be rectified by moving the foot end of the bed slightly to the left or right whilst leaving the head end stationary.

PISTONS

The pistons used in the construction of this product are extremely strong and cannot be operated by hand when taken off the ottoman. All pistons are tested for correct pressure and operation before being attached to the slat unit.
Initially it might appear that the pistons are very stiff when opening and closing the ottoman.

THIS IS PERFECTLY NORMAL

When fully assembled and the mattress is in position, please raise and lower the ottoman 4/5 times to ensure the gas piston are fully lubricated.

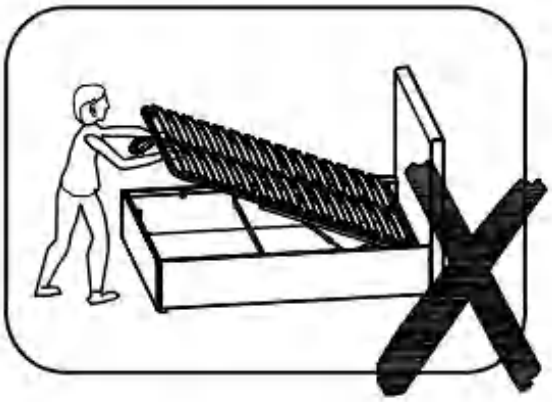

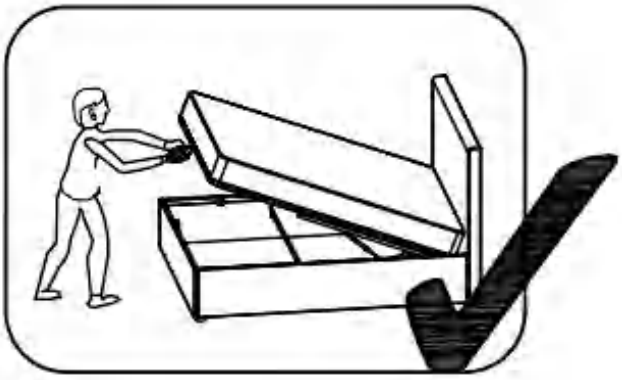

You can choose mobile control or RF Remote ControL

First, pull out the plastic ard on the RF Remote Controller

and power on the RF Remote Controller.

Mobile phone control steps:

1.Connect LED Lamp and RF RGB Controller.
2. Plug in the Adaptor Power supply.
3. Scan the RF RGB Controller QR code on the controller and download the soft are .
4. Turn on the Bluetooth function of the mobile phone and seach for Bluetooth pairing .
5. Open the LED APP and switch colors change.
   Click the music switch to realize the skip mode of different LED lights.
   Press the timing witch to realize the automaatic li t o fffunction, tc.

Sie haben die Wahl zwischen mobiler Steuerung oder RF Remote ControL

Ziehen Sie zunächst die Plastkkarte auf der RF-Fernbedienung heraus

und schalten Sie die RF-Fernbedienung ein.

Schrite zur Steuerung des Mobiltelefons:

1.LED-Lampe und RF-RGB-Controller anschließen.
2. Schließen Sie das Netzteil des Adapters an.
3. Scannen Sie den QR-Code des RF RGB Controllers auf dem Controller und laden Sie die Sofware herunter.
4. Schalten Sie die Bluetooth-Funkton des Mobiltelefons ein und suchen Sie nach Bluetooth-Kopplung .
5. Öffnen Sie die LED-APP und wechseln Sie die Schalterfarben.

Klicken Sie auf den Musikschalter, um den Skip-Modus verschiedener LED-Leuchten zu aktvieren.
Drücken Sie den Zeitschalter, um die automatsche Lichhunknon usw. zu realisieren.

Vous pouvez choisir le contrôle mobile ou le contrôle à distance RF

Tout d'abord, retrez la carte plassque de la télécommande RF et allumez la télécommande RF.

Étapes de contrôle du téléphone portable :
1. Connectez la lampe LED et le contrôleur RF RGB.
2. Branchez l'adaptateur d'alimentaton.
3. Scannez le code QR du contrôleur RF RGB sur le contrôleur et téléchargez le logiciel.
4. Actvez la fonccon Bluetooth du téléphone portable et recherchez l'appairage Bluetooth .
5. Ouvrez l'applicaton LED et changez de couleur.

Cliquez sur le commutateur de musique pour réaliser le mode de saut de différentes lumières LED.
Appuyez sur le commutateur de temporisaton pour réaliser la lumière automaaque o fffuncuon, etc.

EN:Batery Safety Instructions

1.Do not dispose of used buton bateries or remote controls in household trash. To protect the environment and prevent hazardous leakage, please follow these guidelines:

2.Remove buton bateries afer use and take them to a local batery recycling point or hazardous waste collection site.

3.Do not burn or dismantle the bateries to avoid explosion or toxic release.

4.If the remote control is no longer in use, please deliver it to a certified electronics recycling facility to promote resource reuse.

5.Keep out of reach of children to prevent accidental ingestion or injury.

6.This product does not include bateries; please purchase them separately. The compatible buton cell model for the remote control is CR2025 3V.

7.If the light strip is not working, please try replacing the batery first. If the issue persists, contact the seller for assistance.

8.Keep the remote control away from children — keep it away from children! If the batery is accidentally swallowed, seek medical atenntion immediately.

DE:Bateriesicherheitshinweise

1. Entsorgen Sie gebrauchte Knopfzellen oder Fernbedienungen nicht im Hausmüll. Um die Umwelt zu schützen und gefährliche Leckagen zu vermeiden, beachten Sie bite die folgenden Hinweise:
2. Enternen Sie die Knopfzelle nach dem Gebrauch und bringen Sie sie zu einer örtlichen Bateriesammelstelle oder einem Sondermüllentsorgungszentrum.
3. Baterien nicht verbrennen oder zerlegen, um Explosionen oder die Freisetzung gifti er Stoffe zu vermeiden.
4. Wenn die Fernbedienung nicht mehr verwendet wird, bringen Sie sie zu einer zertifizie en Elektronik-Recyclingstelle, um eine Wiederverwertung zu ermöglichen.

5. Außerhalb der Reichweite von Kindern aufb wahren, um versehentliches Verschlucken oder Verletzungen zu verhindern.

6.Dieses Produkt enthält keine Baterien. Bite kaufen Sie diese separat. Das kompatible Knopfzellenmodell für die Fernbedienung ist CR2025, 3V.

7.Wenn der Lichtstreifen nicht funktioniert, versuchen Sie zunächst, die Baterie zu wechseln. Besteht das Problem weiterhin, kontaktieen Sie bite den Verkäufer.

8.Halten Sie die Fernbedienung unbedingt von Kindern fern — unbedingt fernhalten! Wird die Baterie versehentlich verschluckt, suchen Sie sofort medizinische Hilfe auf.

Certificate of Conformity

Certification Number: :ZTL21ER-052406EZ

ZhiyuanTesting(Shenzhen) Co. Ltd. hereby declares that testing has been completedand reports have been generated for:

Applicant:	**Shenzhen Kingunion Lighting Co., LTD**
Address:	**Second Floor, No.1 Kaixinda Technology Park, No 49th Zhoushi Road, Langxin Community, Shiyan Town, Baoan District, Shenzhen City, Guangdong, China**
Manufacturer:	**Shenzhen Kingunion Lighting Co., LTD**
Address:	**Second Floor, No.1 Kaixinda Technology Park, No 49th Zhoushi Road, Langxin Community, Shiyan Town, Baoan District, Shenzhen City, Guangdong, China**
Product:	**LED Strip**
Trademark:	Kingunion Lighting
Model:	**KU-5050-60D-RGB**
Rating:	**DC12V**
Test standard:	**EN 55015:2019+A11:2020** **EN 61547:2009** **EN 61000-3-2:2019** **EN 61000-3-3:2013AMD.1:2019**

The EUT described above has been consolidate by us and found in compliance with the council **EMC** (as amended) -- **2014/30/EU**. It is only valid in connection with the report number:ZTL21ER-052406EZ.

CE

ZHIYUAN TESTING (SHENZHEN) CO., LTD

Senior Manager

May 28, 2021

This certificate of conformity is based on a single evaluation of the submitted sample(s)of the above mentioned product. It does not imply an assessment of the wholeproduct and relevant. Directives have to be observed.

Address:Room 505A, 5th Floor, R&D Center Building, Hongfa Jateli High-tech Park, Langxin Community, Shiyan Street, Baoan District, Shenzhen, China
Tel:+86-755-21002030 Fax:+86-755-21002030 http://www.sz-ztl.cn/

Certification Number: :ZTL21ER-052406EZ

Model accessories:

KU-**-XXX-YY-ZZ-Series-12V**

Remarks:KU represents abbreviation of company name; ** represents led model of product; XXX represents led quantity of product; YY represents length of product; ZZ represents waterproof type of product: A=IP20, B=IP44, C=IP65, D=IP66, E=IP67, F=IP68; Series is product series, represents different color, RGB represents three colors.**

KU-5050-16D-RGB	KU-5050-18D-RGB	KU-5050-24D-RGB	KU-5050-30D-RGB
KU-3528-16D-RGB	KU-3528-18D-RGB	KU-3528-24D-RGB	KU-3528-30D-RGB
KU-2835-16D-RGB	KU-2835-18D-RGB	KU-2835-24D-RGB	KU-2835-30D-RGB
KU-3535-12D-RGB	KU-3535-18D-RGB	KU-3535-24D-RGB	KU-3535-30D-RGB
KU-3838-12D-RGB	KU-3838-18D-RGB	KU-3838-24D-RGB	KU-3838-30D-RGB
KU-4040-12D-RGB	KU-4040-18D-RGB	KU-4040-24D-RGB	KU-4040-30D-RGB
KU-5050-36D-RGB	KU-5050-42D-RGB	KU-5050-48D-RGB	KU-5050-60D-RGB
KU-3528-36D-RGB	KU-3528-42D-RGB	KU-3528-48D-RGB	KU-3528-60D-RGB
KU-2835-36D-RGB	KU-2835-42D-RGB	KU-2835-48D-RGB	KU-2835-60D-RGB
KU-3535-36D-RGB	KU-3535-42D-RGB	KU-3535-48D-RGB	KU-3535-60D-RGB
KU-3838-36D-RGB	KU-3838-42D-RGB	KU-3838-48D-RGB	KU-3838-60D-RGB
KU-4040-36D-RGB	KU-4040-42D-RGB	KU-4040-48D-RGB	KU-4040-60D-RGB
KU-5050-72D-RGB	KU-5050-84D-RGB	KU-5050-96D-RGB	KU-5050-120D-RGB
KU-3528-72D-RGB	KU-3528-84D-RGB	KU-3528-96D-RGB	KU-3528-120D-RGB
KU-2835-72D-RGB	KU-2835-84D-RGB	KU-2835-96D-RGB	KU-2835-120D-RGB
KU-3535-72D-RGB	KU-3535-84D-RGB	KU-3535-96D-RGB	KU-3535-120D-RGB
KU-3838-72D-RGB	KU-3838-84D-RGB	KU-3838-96D-RGB	KU-3838-120D-RGB
KU-4040-72D-RGB	KU-4040-84D-RGB	KU-4040-96D-RGB	KU-4040-120D-RGB
KU-3535-RGB	KU-2835-RGB	KU-3528-RGB	KU-5050-RGB
KU-3838-RGB	KU-4040-RGB		

Address:Room 505A, 5th Floor, R&D Center Building, Hongfa Jateli High-tech Park, Langxin Community, Shiyan Street, Baoan District, Shenzhen, China
Tel:+86-755-21002030 Fax:+86-755-21002030 http://www.sz-ztl.cn/

Certificate of Compliance

Certificate No.	:	WEB250402001RCC
Applicant	:	Shenzhen Kingunion Lighting Co., LTD
Address	:	Second Floor, 2# Building, Kaixinda Technology Park, No 49# Zhoushi Road, Langxin Village, Shiyan Town, Bao'an District, Shenzhen City, Guangdong
Manufacturer	:	Shenzhen Kingunion Lighting Co., LTD
Address	:	Second Floor, 2# Building, Kaixinda Technology Park, No 49# Zhoushi Road, Langxin Village, Shiyan Town, Bao'an District, Shenzhen City, Guangdong
Product	:	LED tape lights
Tested Model	:	KU-NE-0407-S-12V
Model list	:	KU-NE-0408-S-12V,KU-NE-0410-S-12V,KU-NE-0508-S-12V,KU-NE-0510-S-12V,KU-NE-0513-S-12V,KU-NE-0612-S-12V,KU-NE-0613-S-12V,KU-NE-0714-S-12V,KU-NE-0816-S-12V,KU-NE-0817-S-12V,KU-NE-0907-S-12V,KU-NE-0922-S-12V,KU-NE-1010-S-12V,KU-NE-1023-S-12V,KU-NE-1020-S-12V,KU-NE-1212-S-12V,KU-NE-1220-S-12V,KU-NE-1225-S-12V,KU-NE-1515-S-12V,KU-NE-1616-S-12V,KU-NE-2020-S-12V,KU-NE-3030-S-12V,KU-NE-0606-T-12V,KU-NE-1005-T-12V,KU-NE-1010-T-12V,KU-NE-1107-T-12V,KU-NE-1205-T-12V,KU-NE-1212-T-12V,KU-NE-1405-T-12V,KU-NE-1415-T-12V,KU-NE-1515-T-12V,KU-NE-1516-T-12V,KU-NE-1616-T-12V,KU-NE-2018-T-12V,KU-NE-2020-T-12V,KU-NE-3020-T-12V,KU-NE-3030-T-12V,KU-NE-1616-D-12V,KU-NE-1818-D-12V,KU-NE-2222-D-12V,KU-NE-2323-D-12V,KU-NE-2626-D-12V,KU-NE-1010-R-12V,KU-NE-1212-R-12V,KU-NE-1515-R-12V,KU-NE-1616-R-12V,KU-COB-MONO-12V,KU-COB-CCT-12V,KU-COB-RGB-12V,KU-COB-RGBW-12V,KU-NE-XXXX-Y-12V,KU-NE-0407-S-24V,KU-NE-0408-S-24V,KU-NE-0410-S-24V,KU-NE-0508-S-24V,KU-NE-0510-S-24V,KU-NE-0513-S-24V,KU-NE-0612-S-24V,KU-NE-0613-S-24V,KU-NE-0714-S-24V,KU-NE-0816-S-24V,KU-NE-0817-S-24V,KU-NE-0907-S-24V,KU-NE-0922-S-24V,KU-NE-1010-S-24V,KU-NE-1023-S-24V,KU-NE-1020-S-24V,KU-NE-1212-S-24V,KU-NE-1220-S-24V,KU-NE-1225-S-24V,KU-NE-1515-S-24V,KU-NE-1616-S-24V,KU-NE-2020-S-24V,KU-NE-3030-S-24V,KU-NE-0606-T-24V,KU-NE-1005-T-24V,KU-NE-1010-T-24V,KU-NE-1107-T-24V,KU-NE-1205-T-24V,KU-NE-1212-T-24V,KU-NE-1405-T-24V,KU-NE-1415-T-24V,KU-NE-1515-T-24V,KU-NE-1516-T-24V,KU-NE-1616-T-24V,KU-NE-2018-T-24V,KU-NE-2020-T-24V,KU-NE-3020-T-24V,KU-NE-3030-T-24V,KU-NE-1616-D-24V,KU-NE-1818-D-24V,KU-NE-2222-D-24V,KU-NE-2323-D-24V,KU-NE-2626-D-24V,KU-NE-1010-R-24V,KU-NE-1212-R-24V,KU-NE-1515-R-24V,KU-NE-1616-R-24V,KU-COB-MONO-24V,KU-COB-CCT-24V,KU-COB-RGB-24V,KU-COB-RGBW-24V,KU-NE-XXXX-Y-24V,KU-3535-XXXD-RGB,KU-3838-XXXD-RGB,KU-5050-XXXD-RGB,KU-2528-XXXD-RGB,KU-4040-XXXD-RGB,KU-5050-XXXD-RGB+CCT,KU-3838-XXXD-RGB+CCT,KU-2835-XXXD-RGB+CCT,KU-3838+W-XXXD-RGB,KU-2835+W-XXXD-RGB,KU-5050+W-XXXD-RGB,KU-2216-XXXD-CW,KU-2525-XXXD-CW,KU-2025-XXXD-CW, KU-2835-XXXD-CW,KU-3014-XXXD-CW, KU-4040-XXXD-CW,KU-5730-XXXD-CW,KU-315-XXXD-CW,KU-2835-XXXD,KU-2216-XXXD,KU-2025-XXXD,KU-3528-XXXD,KU-315-XXXD,KU-3030-XXXD,KU-4040-XXXD,KU-5730-XXXD
Trade Mark	:	/

The above products have been tested by us with listed standards and found in compliance with the directive RoHS 2011/65/EU & its amendment Directive (EU) 2015/863. It is possible to use CE marking to demonstrate the compliance with this RoHS.

Test standards:	Report(s) Number	Issued By	Issued Date
IEC 62321-3-1:2013 IEC 62321-4:2013+AMD1:2017 IEC 62321-5:2013 IEC 62321-6:2015 IEC 62321-7-1:2015 IEC 62321-7-2:2017 IEC 62321-8:2017	WEB250402001RC	WEBB	Apr. 09, 2025

The statement is based on a single evaluation of one sample of above mentioned products. It does not imply an assessment of the whole production and does not permit the use of the test lab logo.

RoHS Tested

Technical Manager

Apr. 09, 2025

Certificate – Сертификат – 證明書 – Certificat – 증명서 – شهادة

Shenzhen ZKT Technology Co., Ltd.
1/F, No. 101, Building B, No. 6, Tangwei Community Industrial Avenue,
Fuhai Street, Bao'an District, Shenzhen, China

Certificate of Compliance

Certificate Number: ZKT-25070215182C

Certificate's Holder	:	Dongguan Yihong Hardware Electronics Co., Ltd Room 1106, No.2, Shangheng Road, Chang' an Town, Dongguan
Manufacturer	:	Dongguan Yihong Hardware Electronics Co., Ltd Room 1106, No.2, Shangheng Road, Chang' an Town, Dongguan
Trade Mark	:	N/A
Product	:	LED controller
Model(s)	:	YH-6183 YH-252, YH-284, YH-290, YH-287, YH-358, YH-360, YH-6180, YH-6184

Requirement	Standard	Report No.
Art.3.1(a) Safety	EN IEC 62368-1:2024+A11:2024	ZKT-25070215183S
Art.3.1(a) Health	EN IEC 62311:2020 EN 50665:2017	ZKT-25070215182E-1
Art.3.1(b) EMC	ETSI EN 301 489-1 V2.2.3 (2019-11) ETSI EN 301 489-17 V3.3.0 (2024-07)	ZKT-25070215182E-2
Art.3.2 Radio	ETSI EN 300 328 V2.2.2 (2019-07)	ZKT-25070215182E-3

This Attestation of Compliance is issued on a voluntary basis for electrical equipment below the voltage limits of Radio Equipment Directive (RED) 2014/53/EU. The essential requirement are fulfilled accordingly based on the technical specifications applicable at the time of issuance.

CE

Shenzhen ZKT Technology Co., Ltd.
Manager
Jul. 07, 2025

This Certificate of Conformity is based on single evaluation of the submitted sample(s) of the above mentioned product. It does not imply an assessment of the whole product and relevant Directives to be observed.

Importeur	Decobus Handel GmbH
Adresse	Innungsstraße 9,21244 Buchholz,Deutschland
Email/URL	https://www.decobusgroup.de
Hersteller	Shenzhen Kingunion Lighting Co., L TD
Adresse	Second Floor, No.1 Kaixinda Technology Park, No 49th Zhonshi Road,Langxin Communitv, Shiyan Town, Baoan District, Shenzhen City,Guangdong, China
Email/URL	https://www. sz-ztl. cn
Partienumm	202505
Hergestellt in	China
Produkt:LED strip Model:KU-5050-60D-RGB	
Nennspannung:5 V Nennfrequenz: 50/60Hz Leistung：4.5W/M	
	Decobus Handel GmbH Innungsstraße 9,21244 Buchholz,Deutschland https://www.decobusgroup.de

Importeur	Decobus Handel GmbH
Adresse	Innungsstraße 9,21244 Buchholz,Deutschland
Email/URL	https://www.decobusgroup.de
Hersteller	Guangdong Huasheng Electronic Technology Co., LTD
Adresse	118# Dongguan Road,Shippai Town,Dongguan City, Guangdong Province,China
Email/URL	https://www.ptc-testing.com
Partienumm	202505
Hergestellt in	China
Produkt:LED Driver Model:HS24A-120200-CG	
Nennspannung:5 V Nennfrequenz: 50/60Hz Leistung：4.5W/M	
	Decobus Handel GmbH Innungsstraße 9,21244 Buchholz,Deutschland https://www.decobusgroup.de

Importeur	Decobus Handel GmbH
Adresse	Innungsstraße 9,21244 Buchholz,Deutschland
Email/URL	https://www.decobusgroup.de
Hersteller	Dingguan Yihong Hardware Electronics Co.,LTD
Adresse	Room 1106,No2,Shangheng Road,Chang'an Town, Dongguan City, Guangdong Province,China
Email/URL	https://www.ptc-testing.com
Partienumm	202505
Hergestellt in	China
Produkt:LED controller Model:YH-252,YH-284,YH-358....	
Nennspannung:5 V Nennfrequenz: 50/60Hz Leistung：4.5W/M	
	Decobus Handel GmbH Innungsstraße 9,21244 Buchholz,Deutschland https://www.decobusgroup.de

EU DECLARATION OF CONFORMITY

1. Product model/product (product, type, batch or serial number):
HS24A-120200-CG 100-240V/0.6A/ 50Hz/60Hz

2. 2.Name and address of the manufacturer or his authorised representative:

Guangdong Huasheng Electronic Technology Co., Ltd

118# Dongguan Road,Shippai Town,Dongguan City,Guangdong Province

3. This declaration of conformity is issued under the sole responsibility of the manufacturer.

4.Object of the declaration (identification of electrical equipment allowing traceability, it may include a colour image of sufficient clarity where necessary for the identification of the electrical equipment): HS24A-120200-CG 100-240V/0.6A/ 50Hz/60Hz

5.The object of the declaration described above is in conformity with the relevant Union harmonisation legislation:EMC Directive 2014/30/EU.Low Voltage Directive 2014/35/EU.RoHS Directive 2011/65/EU

6.References to the relevant harmonised standards used or references to the other technical specifications in relation to which conformity is declared:

EN 55032:2015 + A11:2020 + A1:2020 ,EN 55035:2017 + A11:2020,EN I EC 61000-3-2:2019 + A1:2021 ,EN 61000-3-3:2013 + A1:2019 + A2:2021

DIN VDE 0620-1(VDE 0620-1):2021-02,DIN VDE 0620-2-1 VDE 0620-2-1:2021-02/A1 VDE 0620-2-1/A1:2023-09,EN I EC 61558-1:2019,EN 61558-2-16:2009+A1:2013 IEC 62321-2:2021,IEC 62321-3-1:2013, IEC 62321-4:2013+AMD1:2017,IEC

62321-5:2013,IEC 62321-7-2: 2017 and IEC 62321-7-1: 2015,IEC 62321-6:2015
7.Additional information: Risk of electric shock.Do not open.For indoor use only.

Signed for and on behalf of:
Guangdong Huasheng Electronic Technology Co., Ltd
(place and date of issue):2025.12.11

(name, function) (signature):杨衍秀

广东华胜电子科技有限公司