N625P317984

WF324655

Product manual
Gebrauchsanweisung
Manuel du produit
Manual del producto
Manuale del prodotto

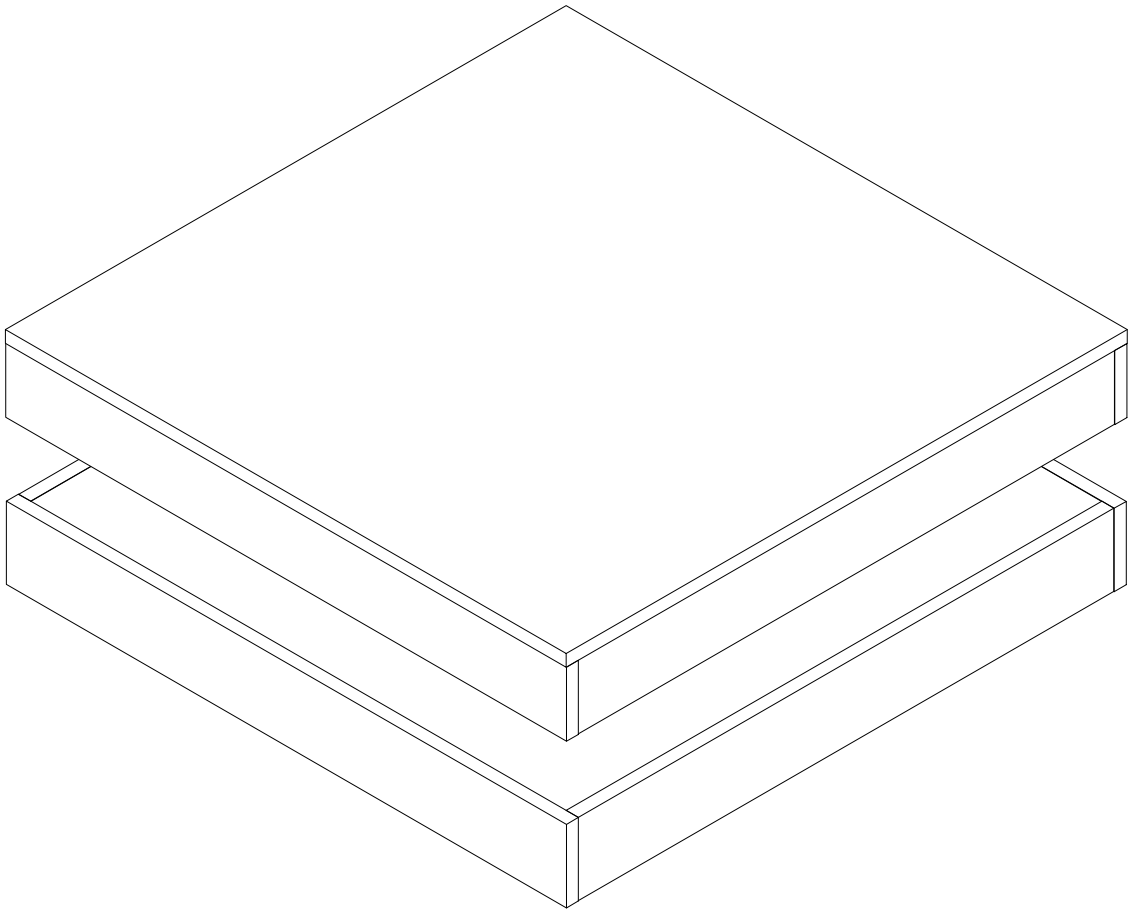

Points de collecte sur www.quefairedemesdechets.fr
Privilégiez la réparation ou le don de votre appareil !

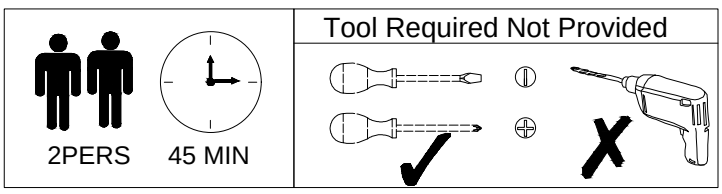

[DE]
Warnung: Lesen Sie die Anleitung vor dem Zusammenbau bitte vollständig durch. Überprüfen Sie, ob Sie alle auf den Seiten aufgeführten Komponenten und Werkzeuge haben.
Warnung: Legen Sie alle Teile auf eine ebene Fläche. Legen Sie eine weiche Decke oder Ähnliches darunter, um sie vor Kratzern oder Flecken zu schützen. Vermeiden Sie es, Komponenten über den Boden zu ziehen oder zu schieben.
Warnung: Überprüfen Sie regelmäßig alle Beschläge und Befestigungen, um sicherzustellen, dass sie sicher sind und um Unfälle zu vermeiden. Wenn Teile fehlen, kaputt, beschädigt oder abgenutzt sind, verwenden Sie das Produkt nicht weiter, bis es mit vom Hersteller autorisierten Teilen repariert wurde.
Warnung: Lassen Sie Kinder nicht auf die Möbel klettern, da dies zum Umkippen und zu schweren Verletzungen führen kann. Bauen Sie die Möbel außerhalb der Reichweite von Kindern zusammen.
Warnung: Stellen Sie die Möbel nicht in die Nähe von Feuerquellen oder heißen Gegenständen, um Brandgefahr zu vermeiden.
Warnung: Reinigen Sie die Möbel mit einem feuchten Tuch oder Alkohol. Verwenden Sie keine Reinigungsmittel mit ätzenden Chemikalien.

[EN]
Warning: Please read instructions fully before starting assembly. Check you have all the components and tools listed on pages.
Warning: Please place all parts on a flat surface. Place a soft blanket or similar underneath to protect against scratches or stains. Avoid dragging or sliding components across the floor.
Warning: Regularly check all fittings and fastenings to ensure they are secure and to prevent accidents. If any parts are missing, broken, damaged, or worn, discontinue use of the product until repairs have been made using factory authorized parts.
Warning: Do not allow children to climb on the furniture as this may result in tipping and serious personal injury. Assemble the furniture away from the reach of children.
Warning: Do not place furniture close to fire sources or high-temperature objects to avoid the risk of fire.
Warning: Clean furniture with a damp cloth or alcohol, avoid using cleaning agents containing corrosive chemicals.

[FR]
Avertissement : Veuillez lire entièrement les instructions avant de commencer l'assemblage. Vérifiez que vous disposez de tous les composants et outils répertoriés sur les pages.
Avertissement : Veuillez placer toutes les pièces sur une surface plane. Placez une couverture douce ou similaire en dessous pour les protéger des rayures ou des taches. Évitez de faire glisser les composants sur le sol.
Avertissement : Vérifiez régulièrement tous les raccords et fixations pour vous assurer qu'ils sont bien fixés et pour éviter les accidents. Si des pièces manquent, sont cassées, endommagées ou usées, cessez d'utiliser le produit jusqu'à ce que des réparations aient été effectuées à l'aide de pièces autorisées par l'usine.
Avertissement : Ne laissez pas les enfants grimper sur les meubles car cela pourrait entraîner un basculement et des blessures graves. Assemblez les meubles hors de portée des enfants.
Avertissement : Ne placez pas les meubles à proximité de sources de feu ou d'objets à haute température pour éviter tout risque d'incendie.
Avertissement : Nettoyez les meubles avec un chiffon humide ou de l'alcool, évitez d'utiliser des produits de nettoyage contenant des produits chimiques corrosifs.

[IT]
Attenzione: leggere attentamente le istruzioni prima di iniziare il montaggio. Verificare di avere tutti i componenti e gli strumenti elencati nelle pagine.
Attenzione: posizionare tutte le parti su una superficie piana. Posizionare una coperta morbida o simile sotto per proteggere da graffi o macchie. Evitare di trascinare o far scivolare i componenti sul pavimento.
Attenzione: controllare regolarmente tutti i raccordi e i dispositivi di fissaggio per assicurarsi che siano sicuri e per prevenire incidenti. Se alcune parti sono mancanti, rotte, danneggiate o usurate, interrompere l'uso del prodotto fino a quando non siano state eseguite le riparazioni utilizzando parti autorizzate dalla fabbrica.
Attenzione: non consentire ai bambini di arrampicarsi sui mobili poiché ciò potrebbe causare ribaltamenti e gravi lesioni personali. Montare i mobili lontano dalla portata dei bambini.
Attenzione: non posizionare i mobili vicino a fonti di fuoco o oggetti ad alta temperatura per evitare il rischio di incendio.
Attenzione: pulire i mobili con un panno umido o alcol, evitare di utilizzare detergenti contenenti sostanze chimiche corrosive.

[ES]
Advertencia: Lea las instrucciones completamente antes de comenzar el montaje. Compruebe que tiene todos los componentes y herramientas que se enumeran en las páginas.
Advertencia: Coloque todas las piezas sobre una superficie plana. Coloque una manta suave o algo similar debajo para protegerlas de rayones o manchas. Evite arrastrar o deslizar los componentes por el piso.
Advertencia: Verifique regularmente todos los accesorios y fijaciones para asegurarse de que estén seguros y evitar accidentes. Si falta alguna pieza, está rota, dañada o desgastada, deje de usar el producto hasta que se hayan realizado las reparaciones con piezas autorizadas de fábrica.
Advertencia: No permita que los niños se suban a los muebles, ya que esto puede provocar que se vuelquen y lesiones personales graves. Monte los muebles fuera del alcance de los niños.
Advertencia: No coloque los muebles cerca de fuentes de fuego u objetos de alta temperatura para evitar el riesgo de incendio.
Advertencia: Limpie los muebles con un paño húmedo o alcohol, evite usar agentes de limpieza que contengan químicos corrosivos.

N625P317984

WF324655

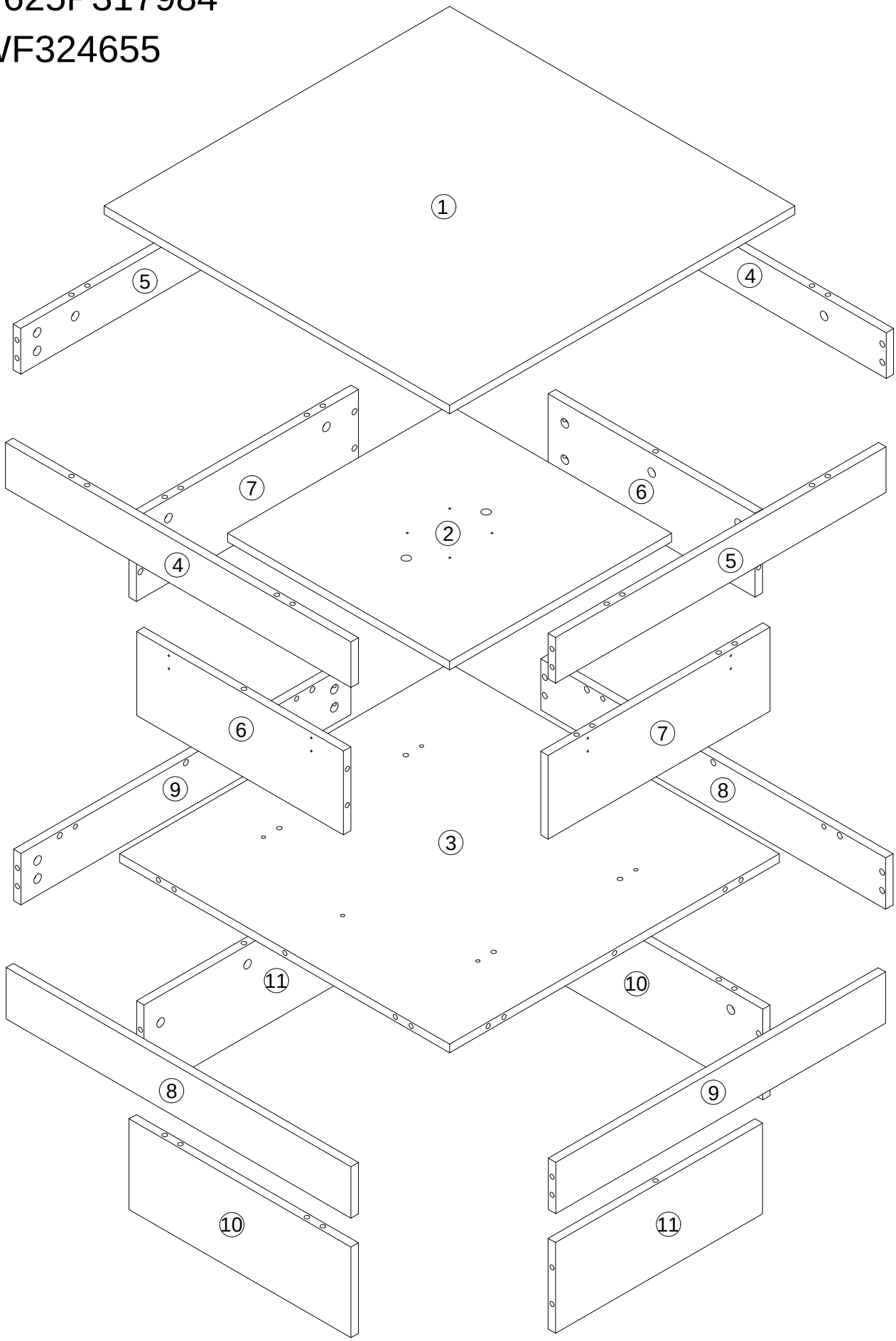

Part List for N625P317984/WF324655

1 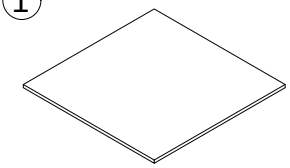 x1	2 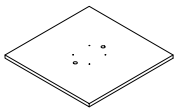 x1	3 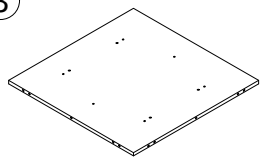 x1	4 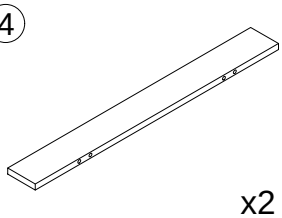 x2
5 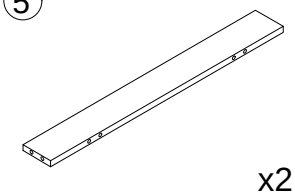 x2	6 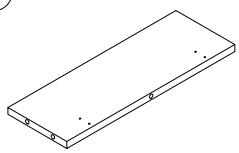 x2	7 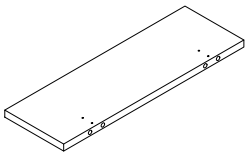 x2	8 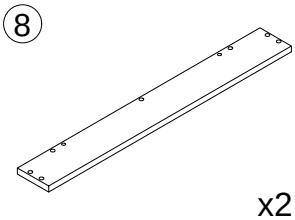 x2
9 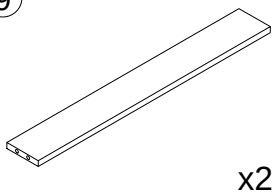 x2	10 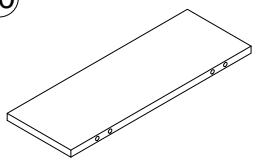 x2	11 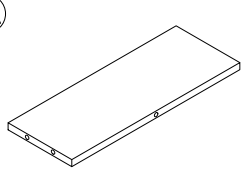 x2	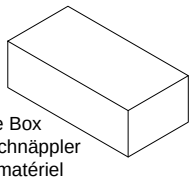 EN:Hardware Box DE:Der festschnäppler FR:Boîte de matériel IT:Scatola Hardware ES:Caja de Hardware

Hardware List for N625P317984/WF324655

A 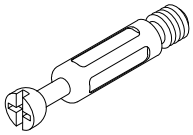 M6X35mm x64	B Φ15X10mm x64	C 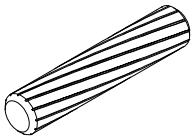 Φ8X40mm x28	D 3.5X14mm x24
E 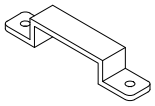 x8	F 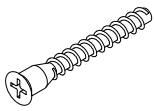 M7X48mm x6	G 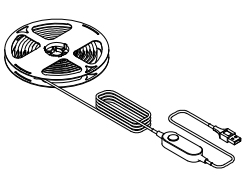 1850mm x1	H 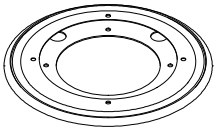 Φ204X9mm x1
T 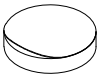 Φ15X3mm x4	M x18	Y x2	

EN:If you find that the white glue particles on the board are missing, please press part Y into the board.
DE:Sollten Sie feststellen, dass die weißen Gummipartikel auf der Platine fehlen, drücken Sie bitte Teil Y in die Platine.
FR:Si vous constatez qu'il manque des particules de caoutchouc blanc sur le tableau, veuillez enfoncer la partie Y dans le tableau.
IT:Se trovi che mancano le particelle di gomma bianca sulla tavola, premi la parte Y sulla tavola.
ES:Si descubre que faltan las partículas de goma blancas en el tablero, presione la parte Y en el tablero.

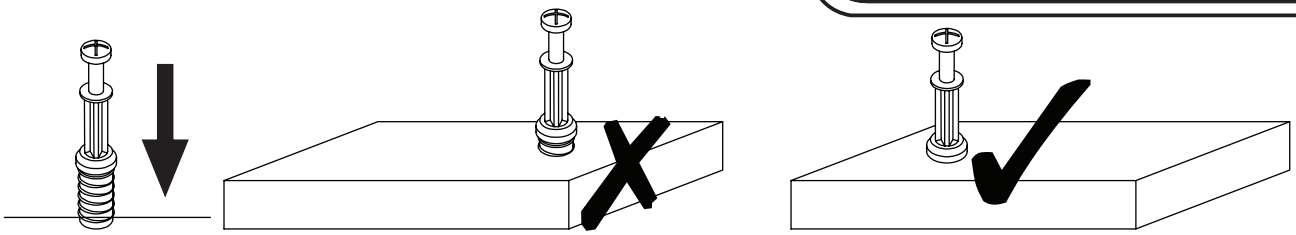

EN_QUICKFIT: Tighten quickfit until shoulder is flush with panel.Do not overtighten or undertighten.
FR_RACCORD RAPIDE:Faites serrer le raccord rapide jusqu'à ce que l'épaulement soit parfaitement encastré dans le panneau. Il ne faut ni trop serrer ni insuffisamment serrer.
ES_QUICKFIT:Apriete quickfit hasta que el hombre se descargue con el panel. NO lo sobreapriete ni lo apriete poco.
DE_QUICKFIT:Ziehen Sie den Quickfit fest, bis die Schulter mit der Platte bündig ist. Bitte nicht zu fest oder zu schwach anziehen.
IT_MONTAGGIO RAPIDO:Stringere il montaggio rapido fino a quando la spalla è a filo con il pannello, non stringere troppo o troppo poco.

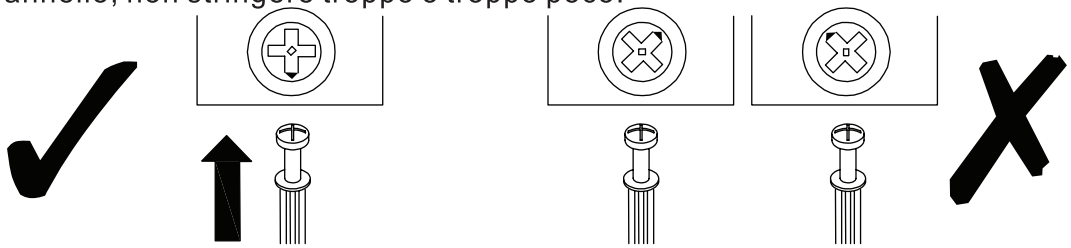

EN_CAM LOCK: When fitting cam lock, ensure starting position is correct before you insert connecting quickfit.
FR_SERRURE BATTEUSE:Avant d'insérer la serrure batteuse, veillez à la bonne orientation avant d'insérer le raccord rapide.
ES_CIERRE DE LA CÁMARA:Cuando instale el cierre de la cámara, asegúrese de que la posición de inicio es correcta antes de que inserte el quickfit conector.
DE_CAM-LOCK:Achten Sie bei der Montage des Cam-Locks auf die richtige Ausgangsposition, bevor Sie den Quickfit einsetzen.
IT_BLOCCAGGIO A CAMMA:Quando si monta il bloccaggio a camma, assicurarsi che la posizione iniziale sia corretta prima di inserire il montaggio rapido di collegamento.

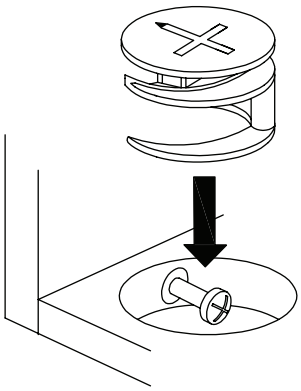

EN_ Quickfit head should be in the centre of the cam lock when the two panels are joined.
Cam lock should be inserted before quickfit.
FR_ Lorsque les deux panneaux sont assemblés, la tête du raccord rapide doit reposer au centre de la serrure batteuse.
Il faut insérer la serrure batteuse avant le raccord rapide.
ES_ El cabezal del quickfit debe estar en el centro del cierre de la cámara cuando se unan los dos paneles.
Se debe insertar el cierre de la cámara antes que el quickfit.
DE_ Der Quickfit-Kopf sollte sich in der Mitte des Cam-Locks befinden, wenn die beiden Platten zusammengefügt sind.
Der Cam-Lock sollte vor dem Quickfit eingesetzt werden.
IT_ La testa del montaggio rapido deve trovarsi al centro del bloccaggio a camma quando i due pannelli sono uniti.
Il Bloccaggio a Camma deve essere inserito prima del montaggio rapido.

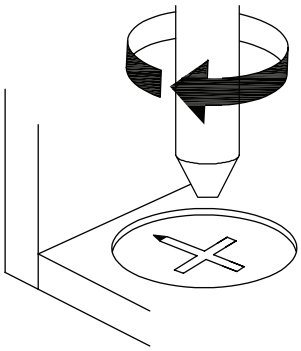

EN_ Turn cam lock clockwise to tighten.
FR_ Faites tourner la serrure batteuse dans le sens des aiguilles d'une montre pour la resserrer.
ES_ Gire el cierre de la cámara en sentido horario para apretarlo.
DE_ Drehen Sie den Cam-Lock im Uhrzeigersinn, um ihn festzuziehen.
IT_ Ruotare il bloccaggio a camma in senso orario per stringere.

1

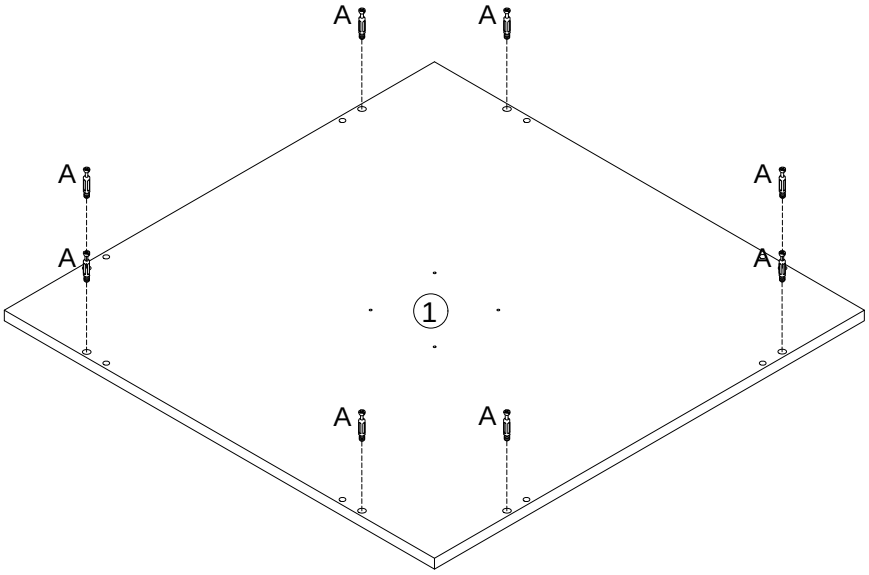

A	x8
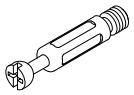	
M6X35mm	

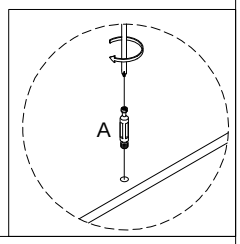

2

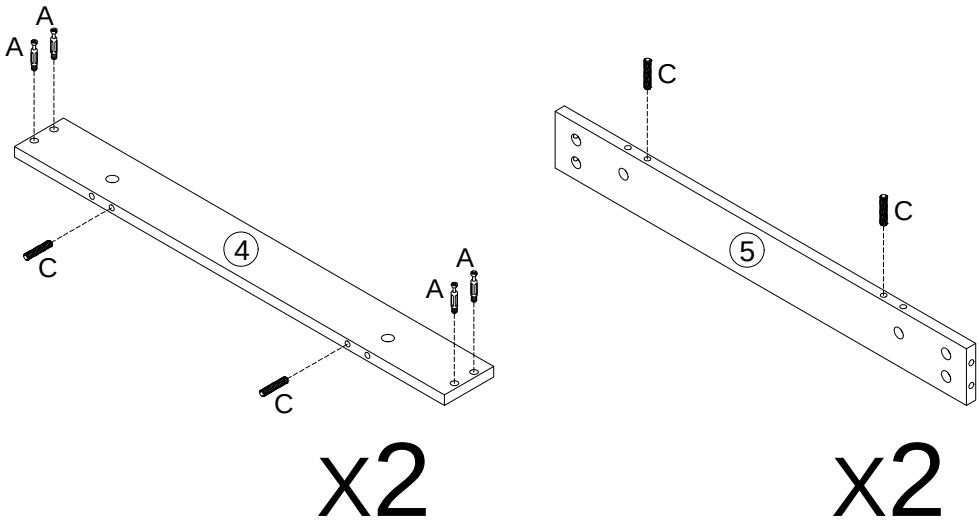

A	x8	C	x8
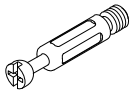		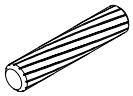	
M6X35mm		Φ8X40mm	

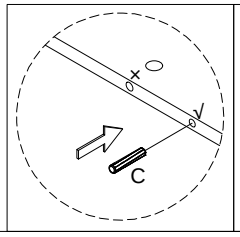

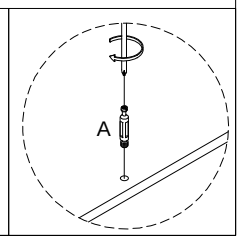

3

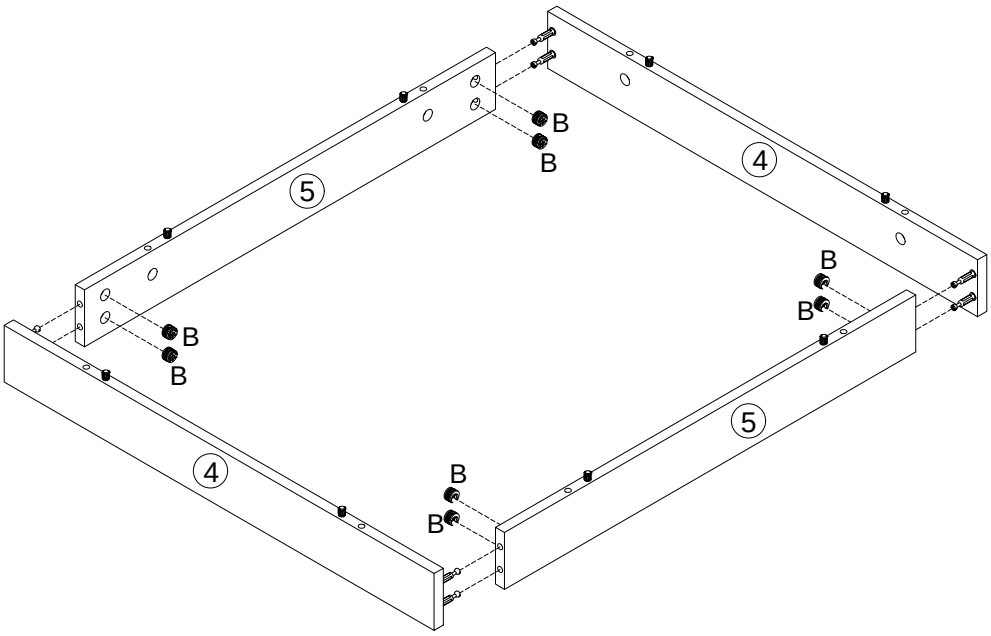

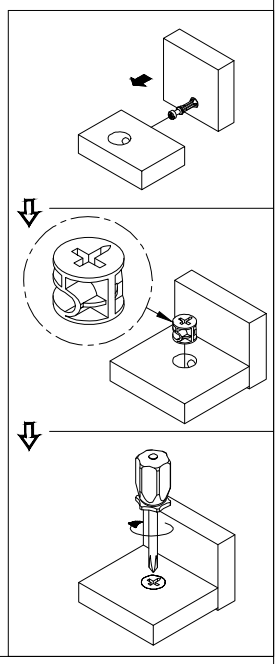

B	X8
Φ15X10mm	

4

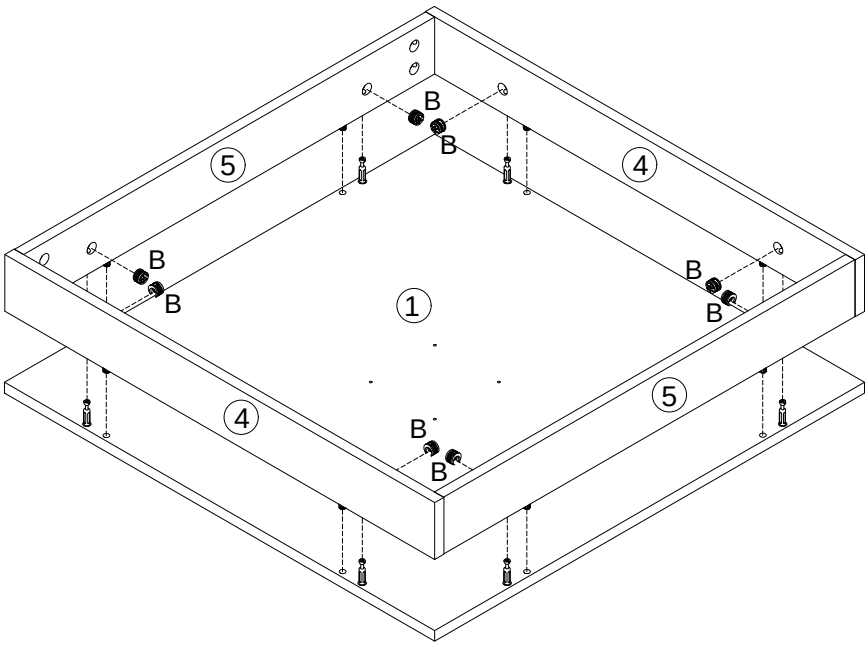

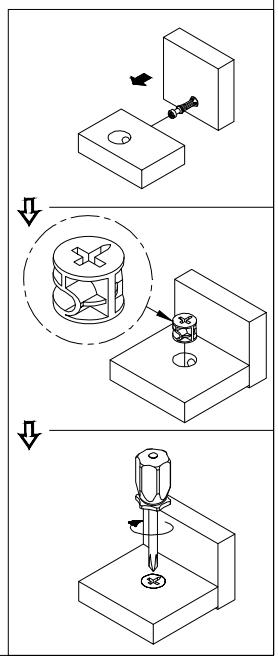

B	X8
Φ15X10mm	

5

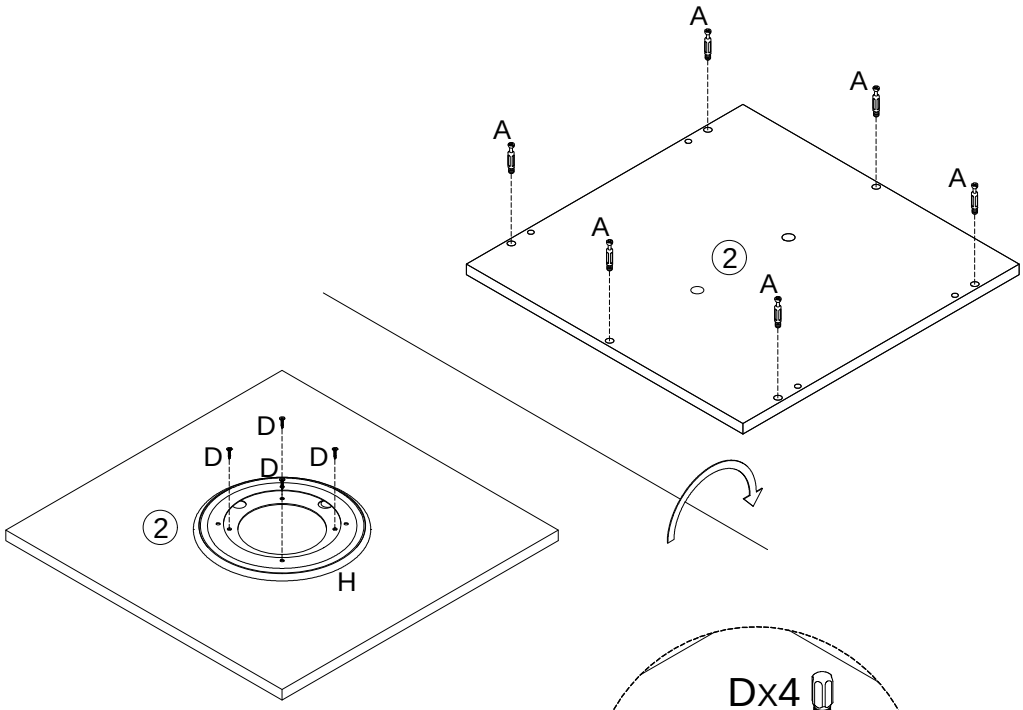

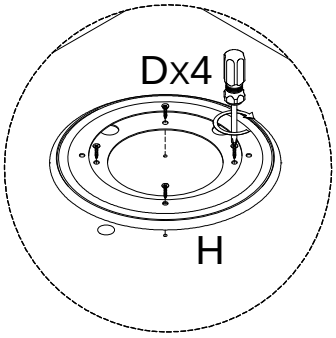

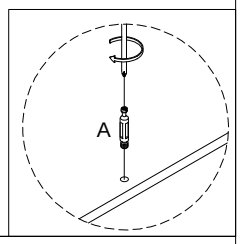

A	x6	D	x4	H	x1
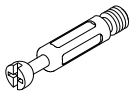				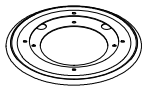	
M6X35mm		3.5X14mm		Φ204X9mm	

6

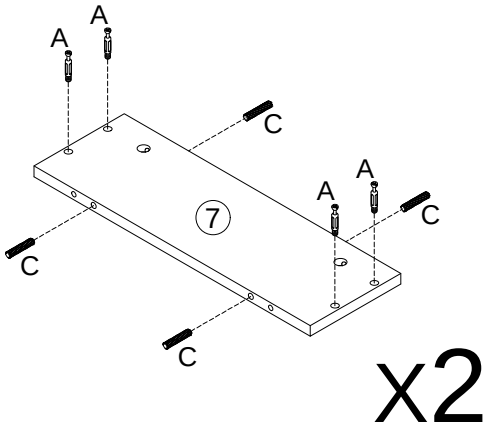

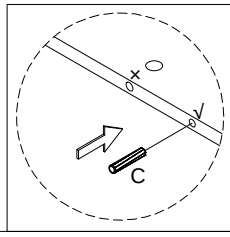

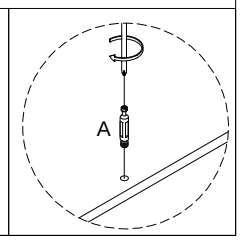

A	x8	C	x8
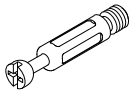		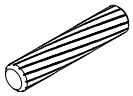	
M6X35mm		Φ8X40mm	

7

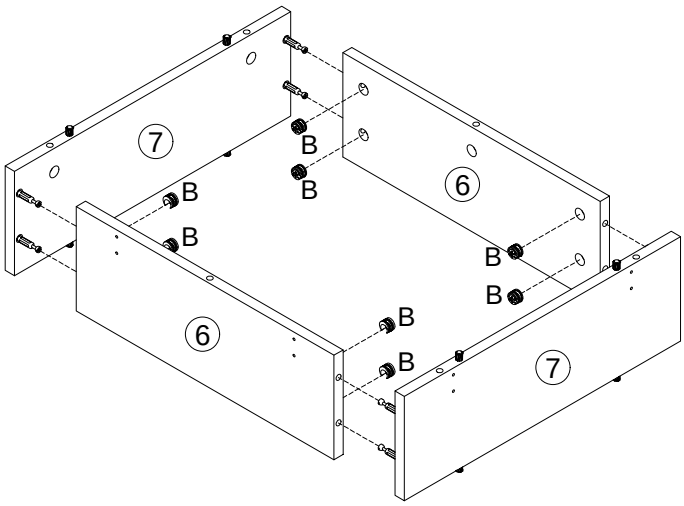

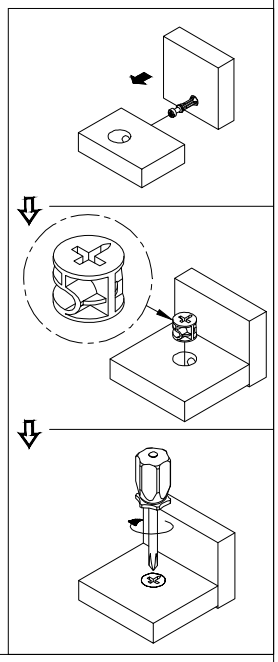

B	X8
Φ15X10mm	

8

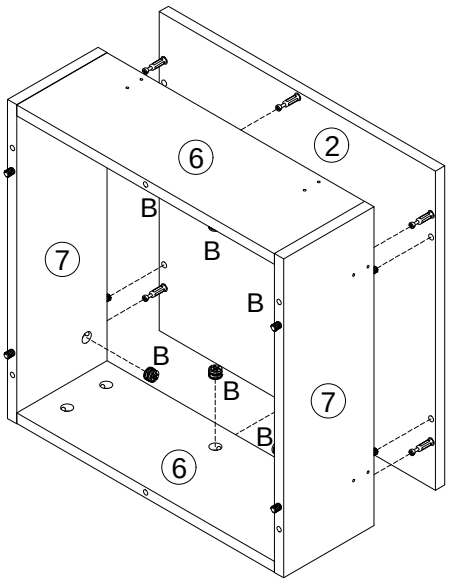

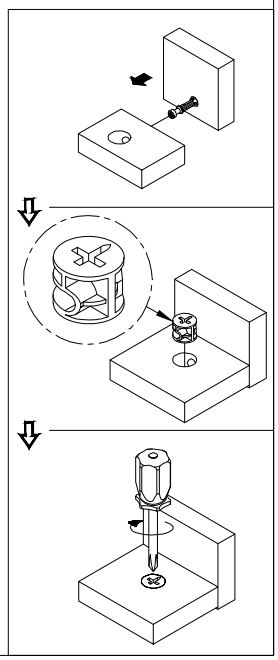

B	X6
Φ15X10mm	

9

EN:Scan to download App control the Led light.
DE:Scannen, um die App zum Steuern des LED-Lichts herunterzuladen
FR:Scanner pour télécharger App contrôler la lumière Led.
ES:Analice para descargar la aplicación control de la luz Led.
IT:Scansiona per scaricare l ’ applicazione controlla la luce Led.

EN:Tear off the back tape
DE:Zerreiß das isolierband nach hinten
FR:Déchirer le ruban arrière
IT:Strappi il nastro posteriore
ES:Arrancar la cinta trasera

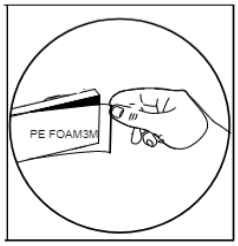

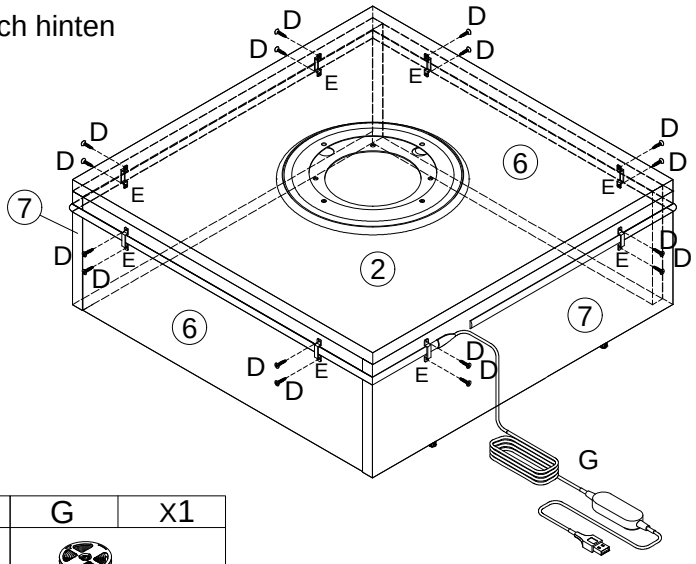

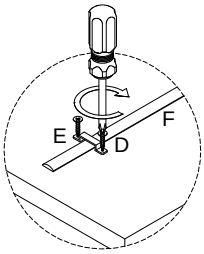

D	X16	E	X8	G	X1
3.5X14mm				1850mm	

10

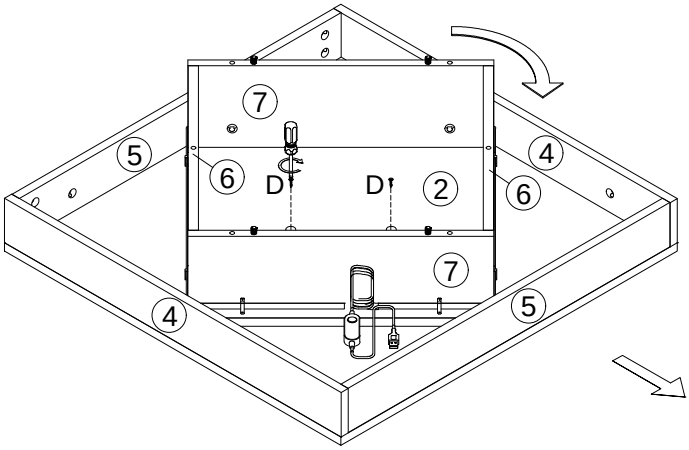

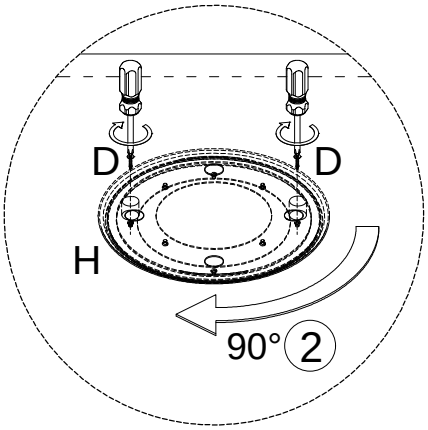

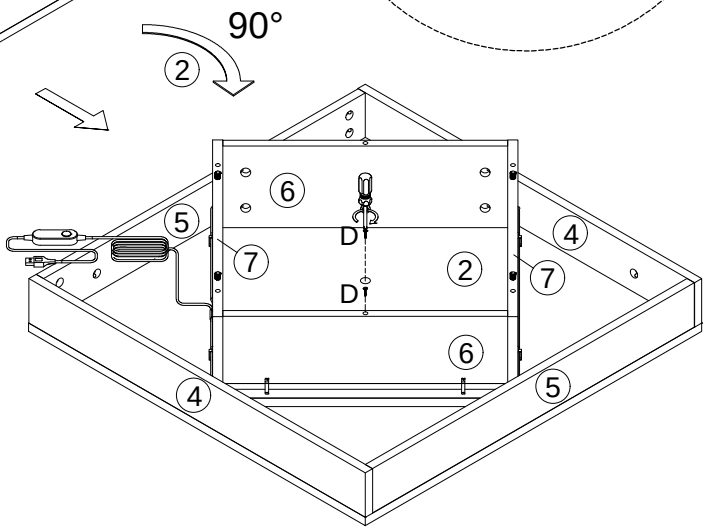

D	X4
3.5X14mm	

11

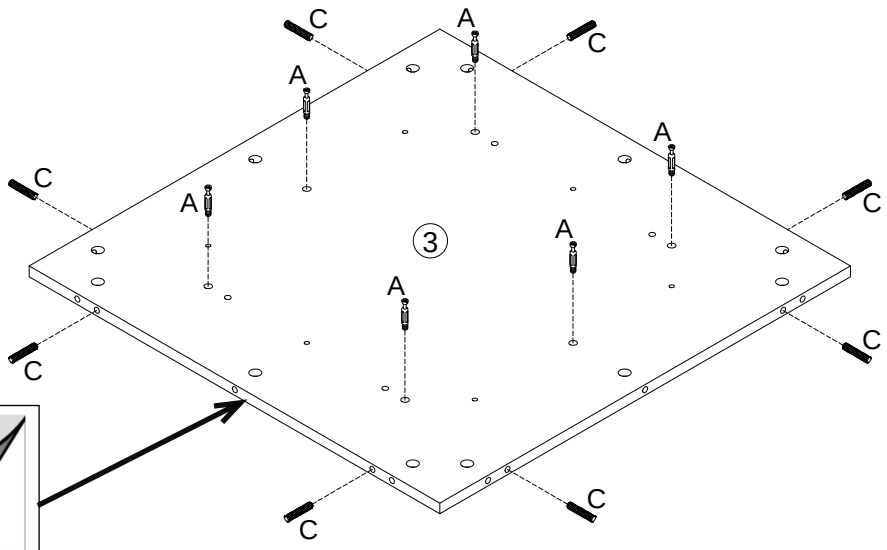

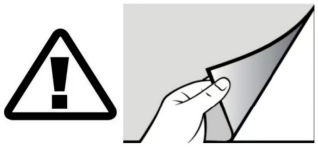

EN-Note: Remove the protective film from the high gloss panels
DE-Achtung: entfernen sie den schutzfilm vom hochglänzenden element
FR-Note: enlevez le film protecteur des panneaux à haute brillance
IT-Nota: rimuovere la pellicola protettiva dai pannelli ad alta lucentezza
ES-Nota: retire la película protectora de los paneles de alto brillo

A	x6	C	x8
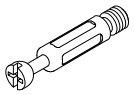		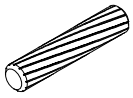	
M6X35mm		Φ8X40mm	

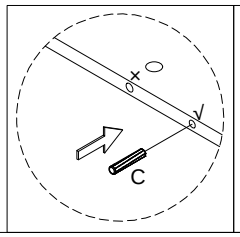

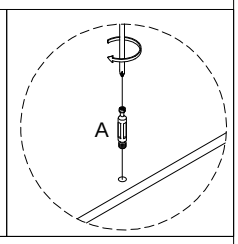

12

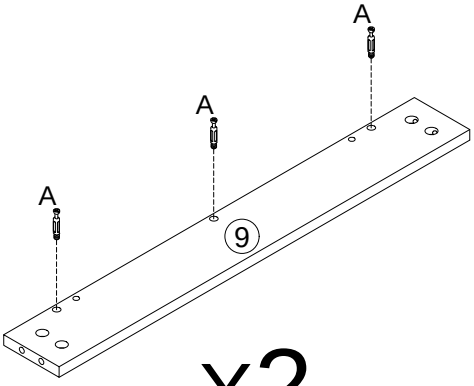

x2

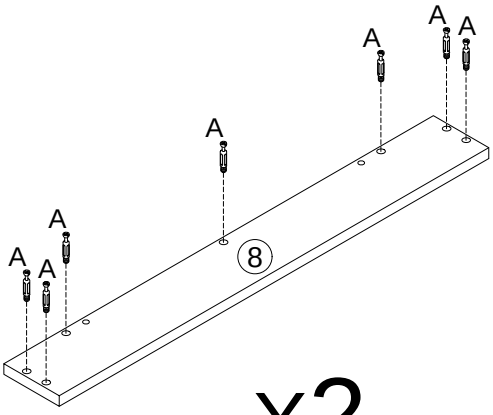

x2

A	x20
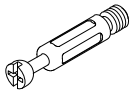	
M6X35mm	

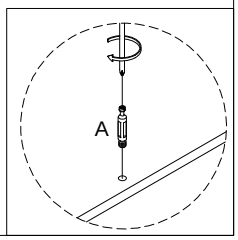

13

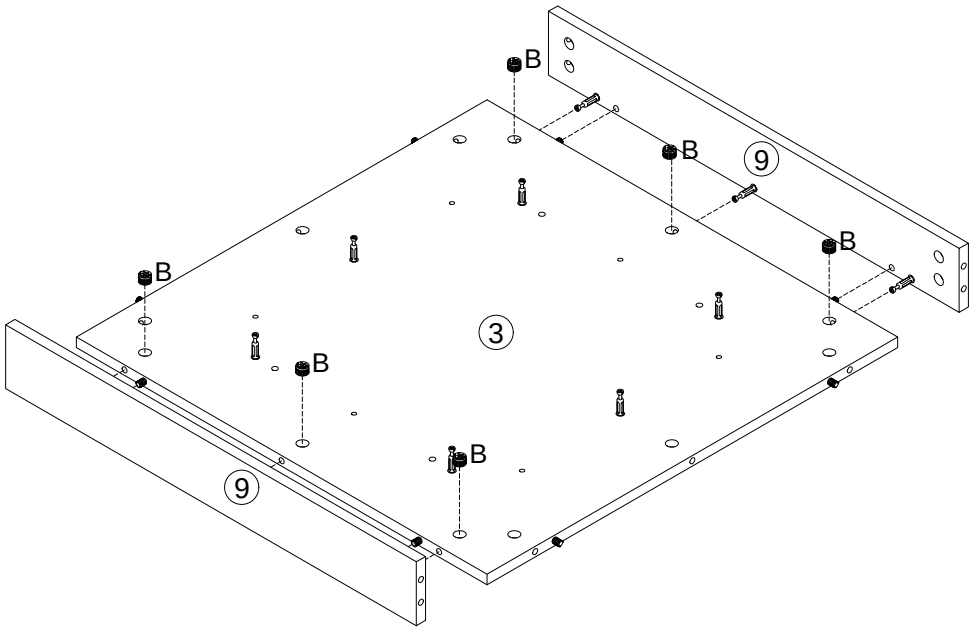

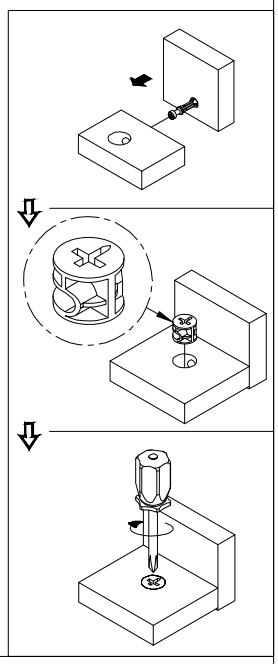

B	X6
Φ15X10mm	

14

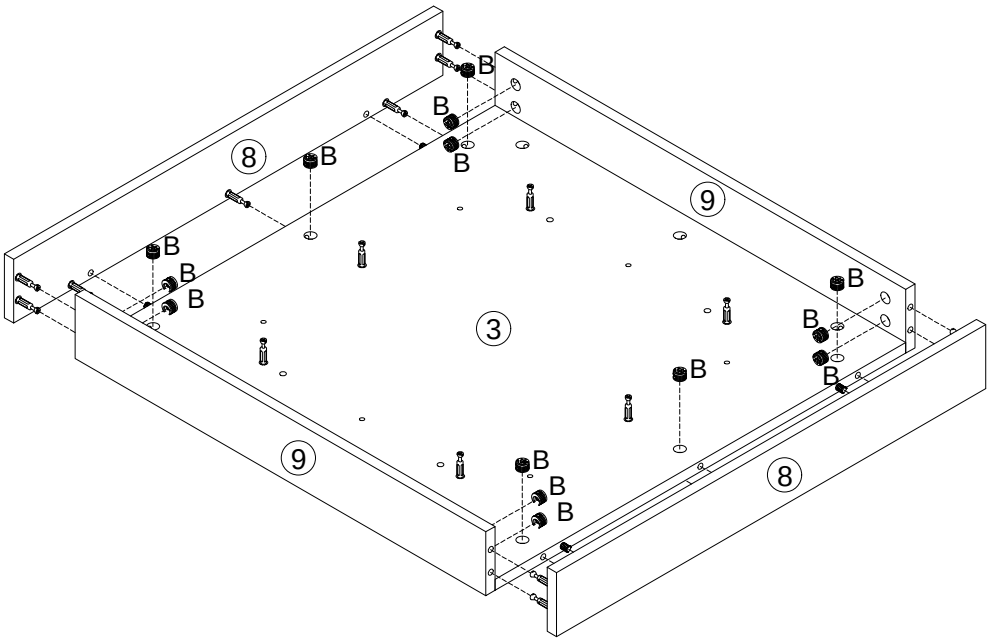

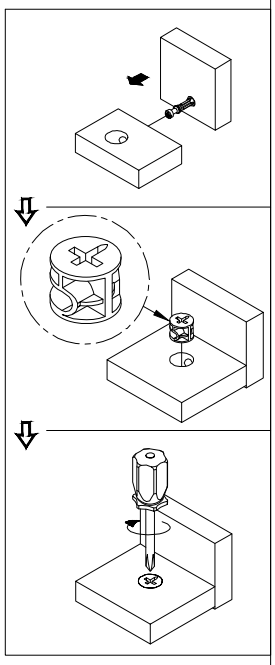

B	X14
Φ15X10mm	

15

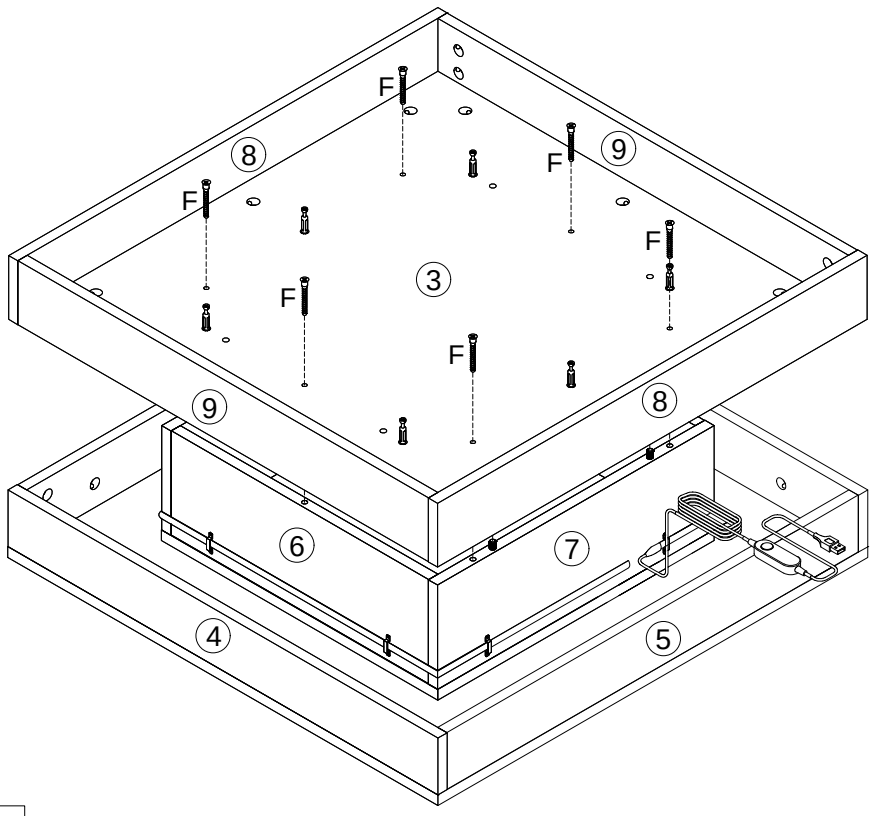

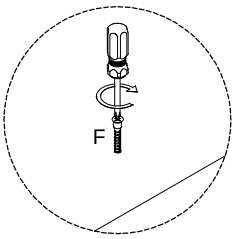

F	X6
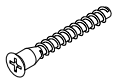	
M7X48mm	

16

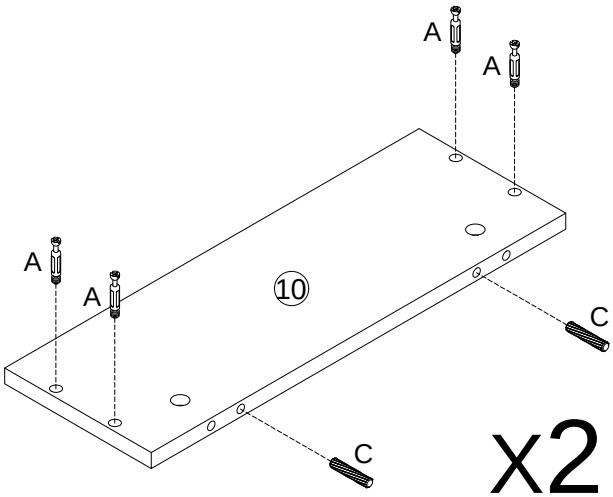

A	X8	C	X4
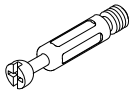		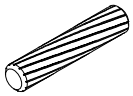	
M6X35mm		Φ8X40mm	

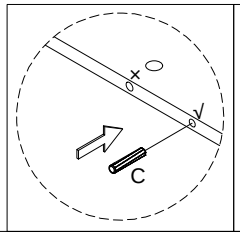

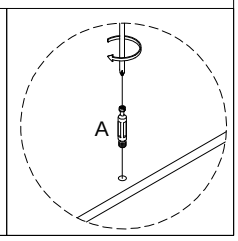

17

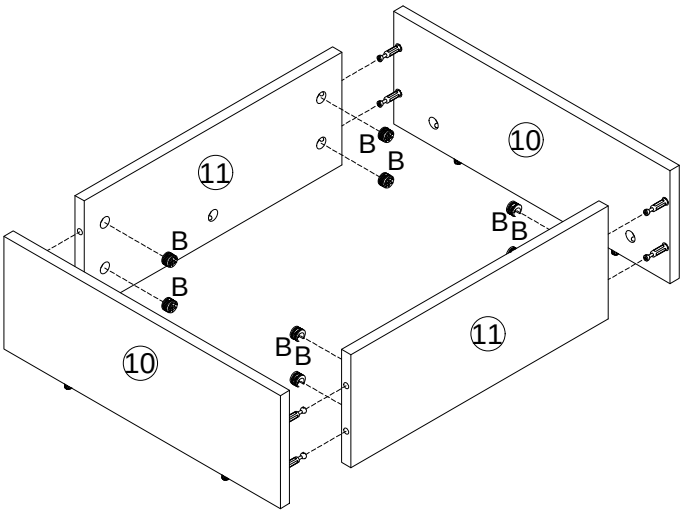

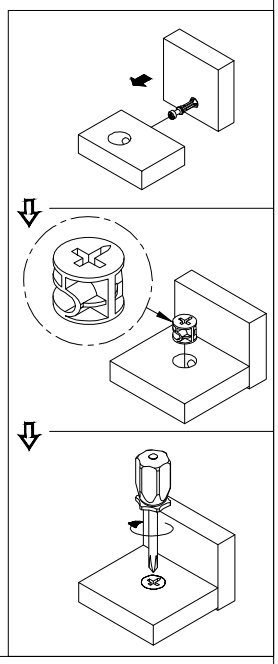

B	X8
Φ15X10mm	

18

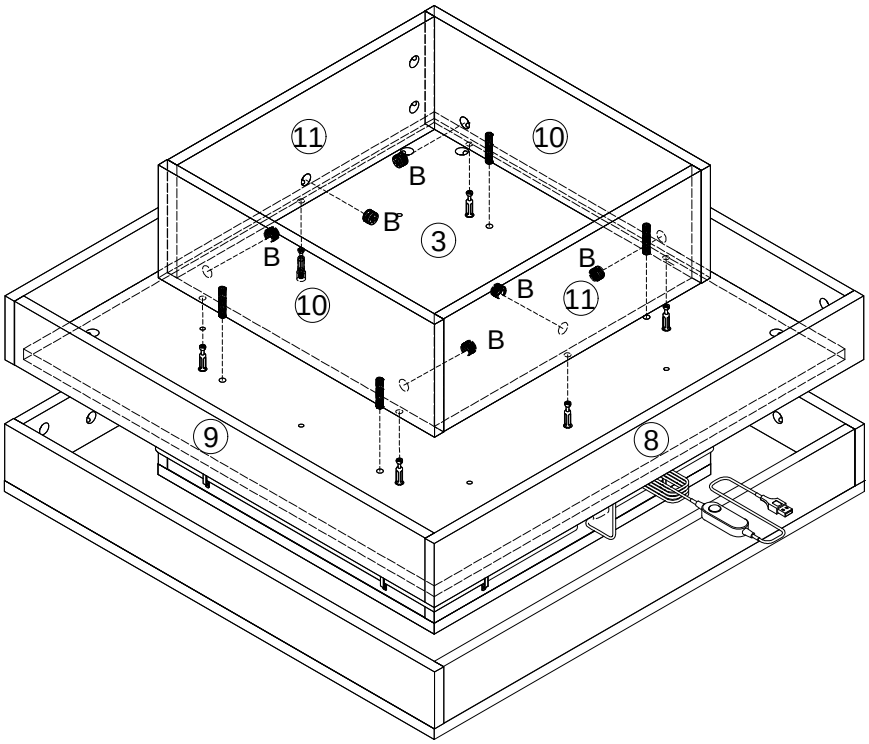

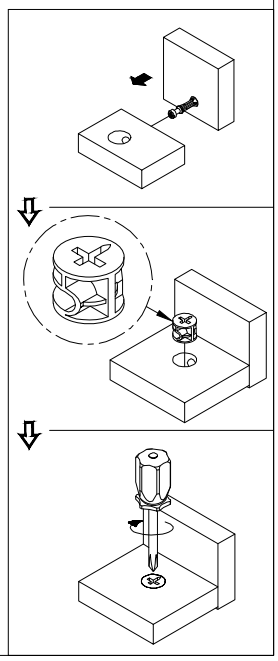

B	X6
Φ15X10mm	

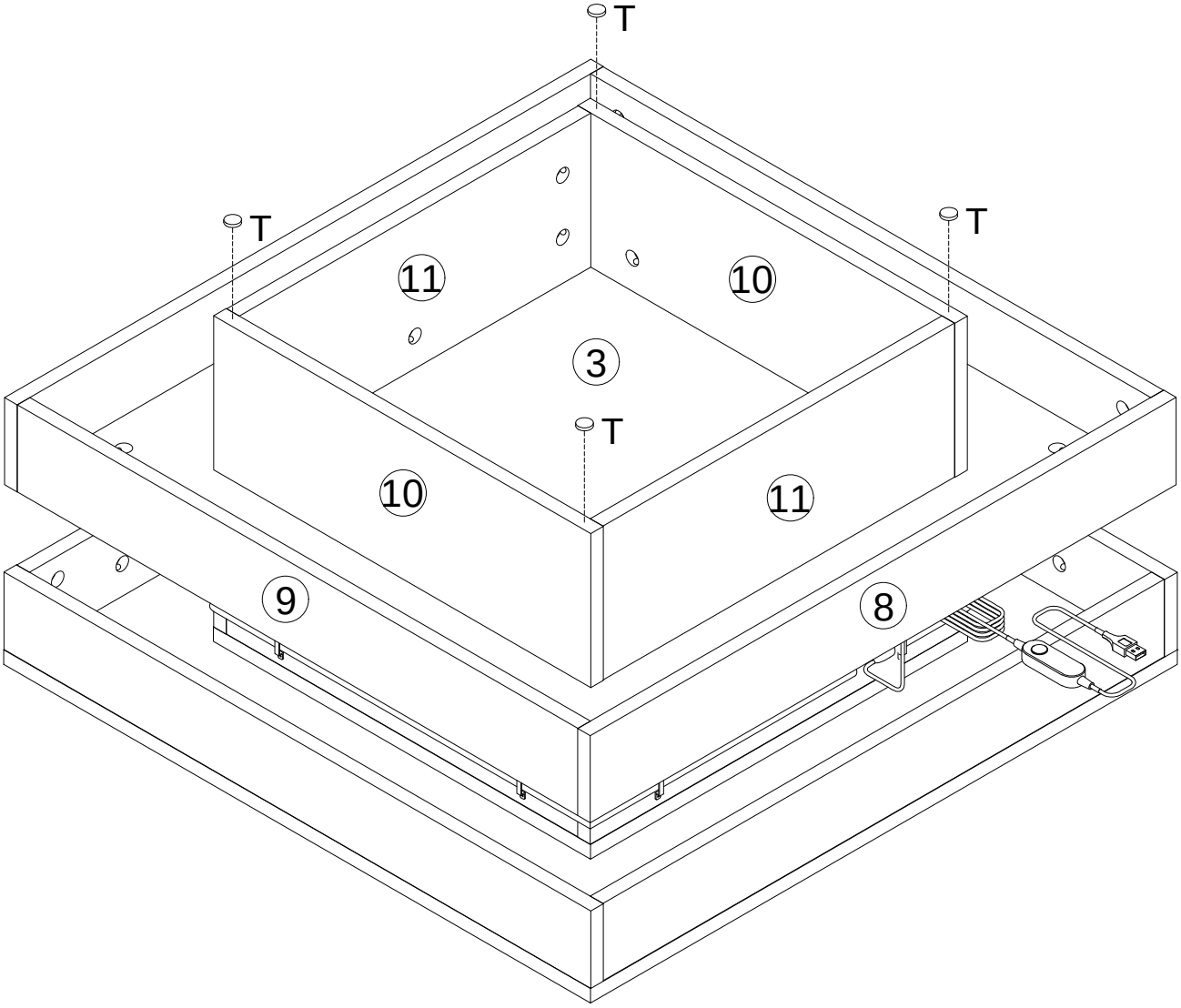

T	X4
Φ15X3mm	

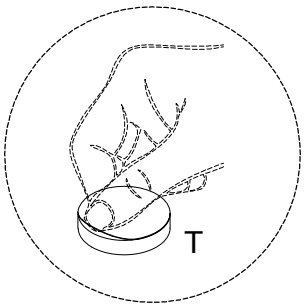

20

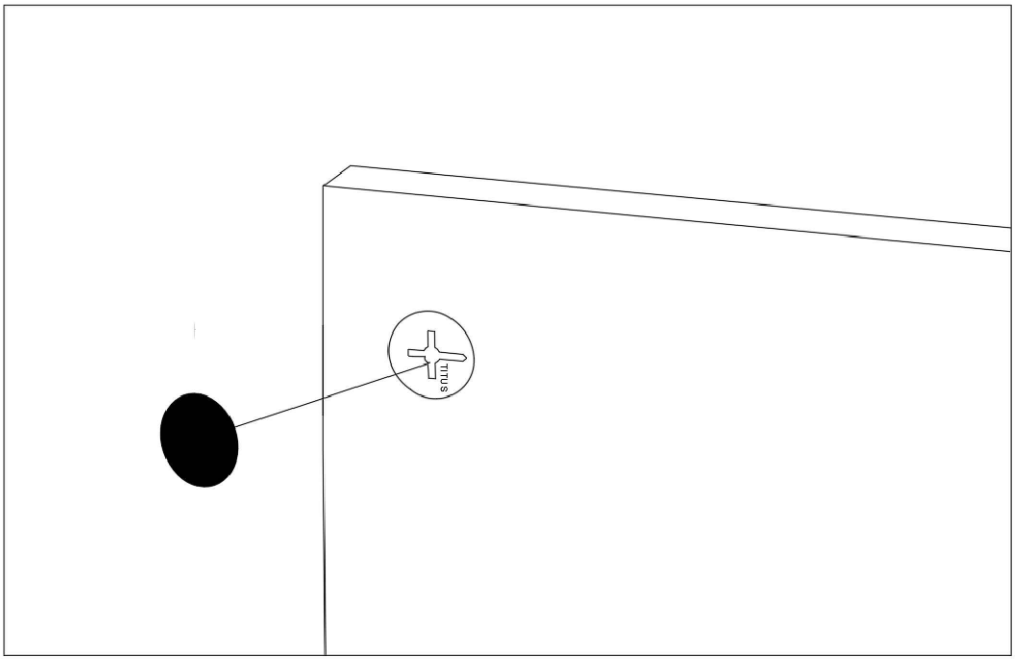

EN: After installing the product, stick the number M on the perforated position
FR: Une fois le produit installé, collez le numéro M à l'endroit où il y a des trous
DE: Nach der Installation des Produkts kleben Sie die Nummer M auf die perforierte Position
IT:Dopo linstallazione del prodotto, fissare il numero M sulla posizione perforata
ES:Después de instalar el producto, pegue el número M en la posición perforada

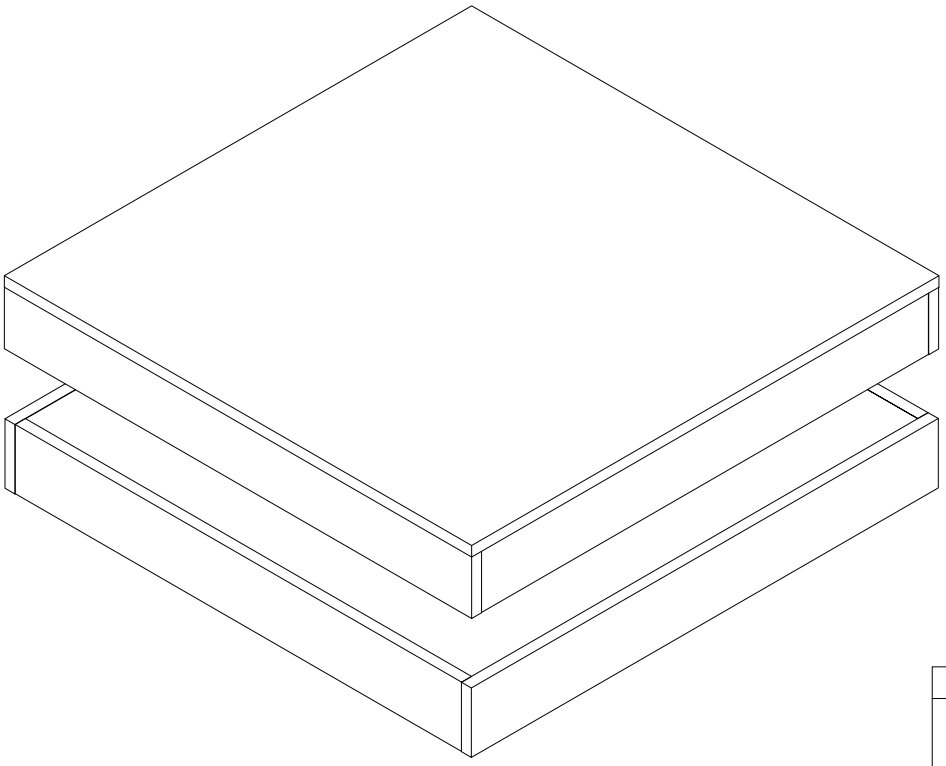

M	x18

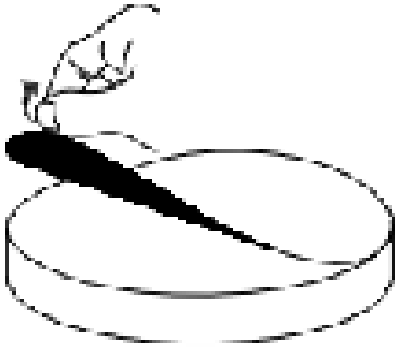

[DE]
BITTE BEACHTEN: Teilenummer 1.3.4.5.8.9 ist mit einer dichten Kunststoffschutzfolie überzogen.
Wenn das Produkt nach der Demontage Kratzer aufweist, machen Sie sich bitte keine Sorgen,
es handelt sich nicht um einen Produktschaden.
Bitte ziehen Sie die schützende Kunststofffolie langsam entlang der Kante von der Oberfläche ab.
Nach dem Abziehen wird das Produkt glatt und sauber.
[EN]
PLEASE NOTE:Part number 1.3.4.5.8.9 are covered with a tight plastic protective film.
If there are scratches on the product after disassembly, please don't worry, it's not product damage.
Please slowly tear off the protective plastic film on the surface along the edge. After peeling off,
the product becomes smooth and clean.
[FR]
REMARQUE : les pièces numéro 1.3.4.5.8.9 sont recouvertes d'un film protecteur en plastique étanche.Si le produit présente des rayures après le démontage, ne vous inquiétez pas, il ne s'agit pas d'
un dommage au produit. Retirez lentement le film protecteur en plastique sur la surface le long du bord.
Une fois décollé, le produit devient lisse et propre.
[IT]
NOTA BENE: il numero di parte 1.3.4.5.8.9 è coperto da una pellicola protettiva in plastica stretta.
Se ci sono graffi sul prodotto dopo lo smontaggio, non preoccuparti, non è un danno al prodotto.
Strappare lentamente la pellicola protettiva in plastica sulla superficie lungo il bordo. Dopo averla staccata, il prodotto diventa liscio e pulito.
[ES]
NOTA: La pieza número 1.3.4.5.8.9 está cubierta con una película protectora de plástico.
Si hay rayones en el producto después de desmontarlo, no se preocupe, no se trata de daños en el product o. Retire lentamente la película protectora de plástico de la superficie a lo largo del borde.
Después de despegarla, el producto quedará liso y limpio.

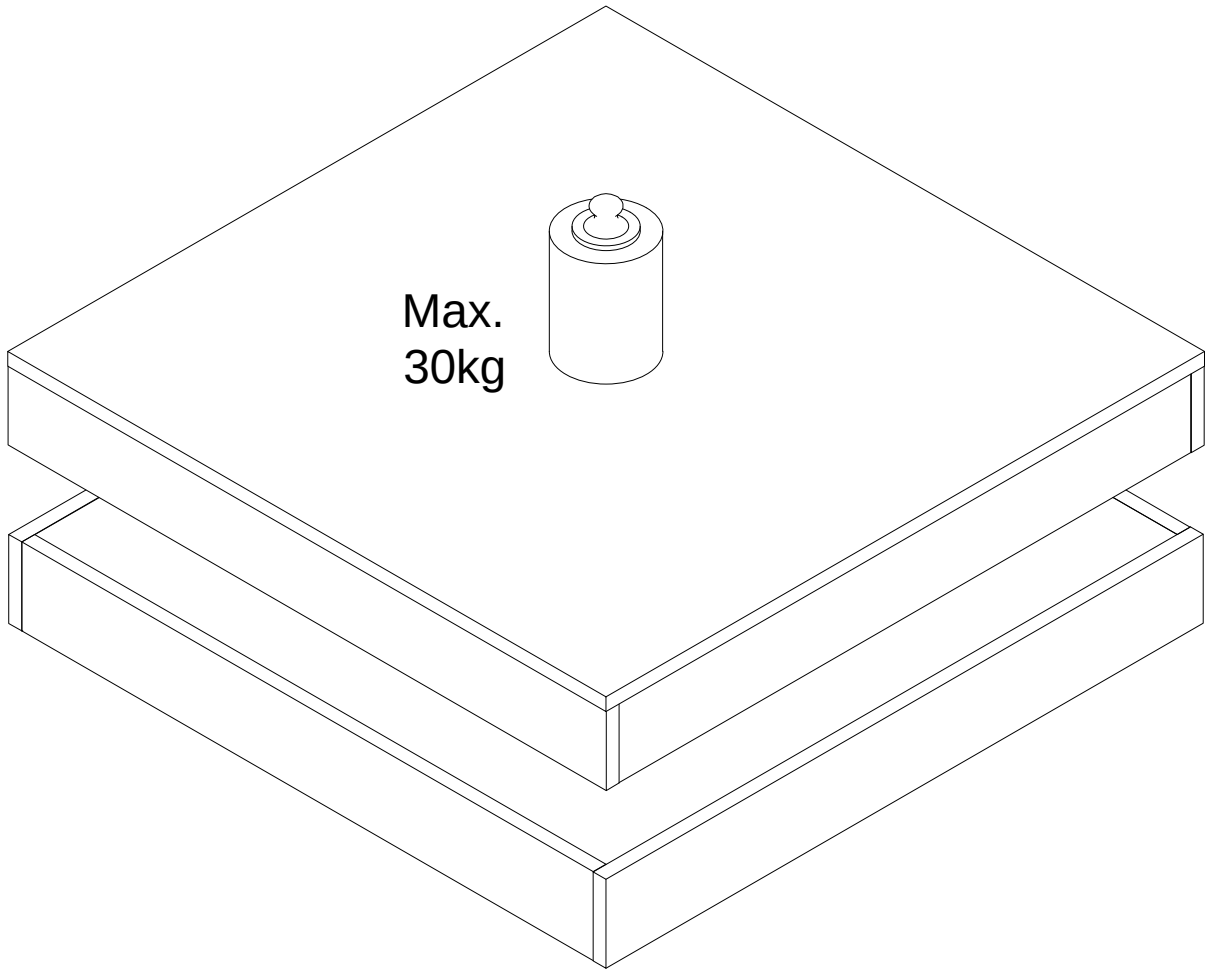
Max.
30kg

APP-PROGRAMMANWENDUNG

HINWEIS:

Detaillierte Anleitung im Menü "Guide"

PRODUKTPARAMETER

- Bluetooth: BLEVA 2
- Eingangsspannung: 4.5~26V
- Betriebstemperatur: -25~75 ° C
- Abmessungen: 43×22×11 mm
- Gewicht: 30g
- Max. Leistung: 144W (24V)

VERBINDUNGSSCHRITTE

①LED-Farbstreifen & Controller verbinden, Controller einschalten

②QR-Code scannen zum App-Download:

③ App starten, Controller suchen & verbinden

④Bluetooth-Drahtlossteuerung genießen

PRODUKTMERKMALE

- Direkte Handy-Steuerung (20m Reichweite)
- Automatische Verbindung in 5 Sekunden
- Musikrhythmus-Synchronisation
- Gruppensteuerung
- Helligkeits-/Geschwindigkeitsregelung
- Unterstützt bis 10m RGB(W)-Streifen
- Automatische Sprachumschaltung (DE/EN)

ANIMATIONSEFFEKTE

- Farbverläufe
- Einfarbige/ Zweifarbige Gradienten
- Monochrome/Bunte Blinkeffekte
- Farbspringen
- Musikresponsive Effekte

APP PROGRAM USAGE

Click to show the lamp list

Switch the color wheel

Click to display settings view

Adjust the color

Click spuare icon to adjust the color

Click to shift the interface

Scan two-dimensional code download APP

①Connect LED color strip and controller, power on controller

②Scan two-dimensional code download APP:

③Start APP, search and connect controller

④Enjoy the Bluetooth wireless control experience

Notes:

detailed operating instructions, enter the menu "Guide":

Product Paramters:

-Bluetooth:BLEV4.2
-Input Voltage:4.5~26V
-Working Temp:-25~75℃
-Size:43*22*11mm
-Weight:30g
-Max Power:144W(24V)

LED mobile phone Bluetooth controllerProduct Features

-LED Bluetooth controller is directly via mobilephone control remote distance can reach 20m without the need to setupeasy to connect open the software within 5 seconds you can automatically connect the controller
-Flow the rhythm of the music changes
-Group control
-Brightness, speed addition and subtraction
-Maximum can be 10 meters RGB(W)strip
-The software shows that the text is based onthe language of the mobile phone set up automatic transformation of Chinese and English

ANIMATION EFFECTS:

-Colorful gradient
-All kinds of monchrome, double color gradient
-All kinds of monochrome, double color, colorfull flashing
-Colorful jump
-Follow the thythm of the music chagnes

APP-PROGRAMMANWENDUNG

Afficher la liste des lampes Farbrad

Changer la Roue chromatique

Afficher les paramètres

Ajuster la couleur

Cliquez sur l'icône carrée pour ajuster la couleur.

Changer d'interface par clic

REMARQUE :
Guide détaillé dans le menu "Guide"

CARACTÉRISTIQUES

- Bluetooth : BLEVA 2
- Tension d'entrée : 4.5~26V
- Température : -25~75° C
- Dimensions : 43×22×11 mm
- Poids : 30g
- Puissance max : 144W (24V)

ÉTAPES DE CONNEXION

① Connecter bande LED & contrôleur, allumer

② Scanner QR code pour télécharger l'app :

③ Lancer l'app, rechercher & connecter

④ Profiter du contrôle Bluetooth sans fil

FONCTIONNALITÉS

- Contrôle direct par smartphone (20m)
- Connexion automatique en 5 secondes
- Synchronisation musicale
- Contrôle de groupe
- Réglage luminosité/vitesse
- Prise en charge bandes ≤10m RGB(W)
- Basculage automatique FR/EN

EFFETS D'ANIMATION

- Dégradés de couleurs
- Dégradés uni/bicolores
- Clignotements mono/colorés
- Saut de couleurs
- Effets réactifs à la musique

UTILIZZO APP

Mostra lista lampade

Cambia ruota colori

Visualizza impostazioni

Regolare il colore

Regola colore con icona quadrata

Cambia interfaccia cliccando

PASSI CONNESSIONE

① Collega striscia LED & controller, accendi

② Scansiona QR code per scaricare APP:

③ Avvia APP, cerca & connetti controller

④ Goditi controllo wireless Bluetooth

NOTA:

Guida completa nel menu "Guide"

SPECIFICHE:

- Bluetooth: BLEVA 2
- Tensione ingresso: 4.5~26V
- Temperatura: -25~75° C
- Dimensioni: 43×22×11 mm
- Peso: 30g
- Potenza max: 144W (24V)

CARATTERISTICHE

- Controllo diretto smartphone (20m)
- Connessione automatica in 5 secondi
- Sincronizzazione ritmo musicale
- Controllo di gruppo
- Regolazione luminosità/velocità
- Supporto strisce ≤10m RGB(W)
- Auto switch IT/EN

EFFETTI ANIMAZIONE:

- Sfumature colore
- Gradienti mono/bicolori
- Luci lampeggianti mono/colorate
- Salto colori
- Effetti reattivi alla musica

USO DE LA APLICACIÓN

Mostrar lista de ____
Lámparas
Cambiar rueda de color

Ver ajustes

Ajustar el color

CliAjustar color
con icono cuadrado

Cambiar interfaz
haciendo clic _____

PASOS DE CONEXIÓN

① Conectar tira LED y controlador, encender

② Escanear QR para descargar APP:

③ Iniciar APP, buscar y conectar

④ Disfrutar control inalámbrico Bluetooth

NOTA:

Guía completa en menú "Guide"

ESPECIFICACIONES:

- Bluetooth: BLEVA 2
- Voltaje entrada: 4.5~26V
- Temperatura: -25~75° C
- Tamaño: 43×22×11 mm
- Peso: 30g
- Potencia máx: 144W (24V)

CARACTERÍSTICAS

- Control directo móvil (20m alcance)
- Conexión automática en 5 segundos
- Sincronización ritmo musical
- Control grupal
- Ajuste brillo/velocidad
- Soporte tiras ≤10m RGB(W)
- Auto cambio ES/EN

EFECTOS DE ANIMACIÓN:

- Degradados de color
- Transiciones mono/bicolores
- Destellos monocromáticos/color
- Salto de colores
- Efectos reactivos a música

Verification of compliance Verification of compliance Verification of compliance

Verification of Compliance

Verification No.:	TMC210319126-E
Name and address of Applicant:	**Shenzhen CWG Technology Co., Ltd** 5 / F, No.264 Baoshi East Road, Shiyan street, Bao'an District, Shenzhen,China 518108
Name and address of Manufacturer	**Shenzhen CWG Technology Co., Ltd** 5 / F, No.264 Baoshi East Road, Shiyan street, Bao'an District, Shenzhen,China 518108
Product name:	**LED Strip**
Rated:	DC12V
Product model(s):	CWG-5050RGB-60D-12V , additional models reference attachment
Product trademark:	创唯光

This verification confirms that the product meets the requirements of the following standard.
The conformity was demonstrated based on following standard(s) listed by European Commission as harmonized with EMC Directive 2014/30/EU.

EN IEC 55015:2019+A11:2020
IEC 61547:2020

The verification has been carried out in accordance with individual rules and conditions agreed with the applicant. Evaluation has been carried out in accordance with:

Test report(s) No.:	TMC210319126-E
Test conducted by:	TMC Testing Services (Shenzhen) Co., Ltd.
Verification issue date:	March 26, 2021

Notes:

This verification refers to the above mentioned product and its conformity in regards of above mentioned standard(s) was proven on test sample.

This verification does not imply meeting all essential requirements, assessment of the series-production or any other restricted Notified Bodies conformity assessment procedure appropriate for the product.

This verification holder shall use this verification in connection to verification of conformity and technical data relevant for the product the verification was issued.

TMC Testing Services (Shenzhen) Co., Ltd.
t:86-755-86642861 cert@tmc-lab.com www.tmc-lab.com
1st Floor, Block A1, Zone A, Xinshidai Gongrong Industrial Park, No. 2, Shihuan Road, Shiyan Street, Baoan District, Shenzhen, China

Bauart geprüft TMC Access to global market Product Safety approved

Lab Director
Lemon Rao

Verification of compliance Verification of compliance Verification of compliance

Verification of Compliance

CWG-5050RGB-30D-12V, CWG-5050RGB-18D-12V, CWG-5050RGB-60D-24V, CWG-5050RGB-60D-5V, CWG-5050RGB-30D-5V, CWG-5050RGB-18D-5V, CWG-5050-60D-12V, CWG-5050-30D-12V, CWG-5050-60D-24V, CWG-HC5050RGB-60D-12V, CWG-HC5050RGB-30D-12V, CWG-HC5050RGB-60D-24V, CWG-HC5050-60D-12V, CWG-HC5050-30D-12V, CWG-HC5050-60D-24V, CWG-HC5050RGB-30D-5V, CWG-HC5050RGB-60D-5V, CWG-HC5050RGB-144D-5V, CWG-2835-60D-12V, CWG-2835-120D-12V，CWG-2835-60D-24V, CWG-2835-120D-24V, CWG-2835-60D-5V, CWG-2835-120D-5V

Note: This attachment only valided with Verification No.: TMC210319126-E

Verification of compliance Verification of compliance Verification of compliance

Verification of Compliance

Verification No.:	MK25070091P01-C01
Name and address of Applicant:	**Shenzhen CWG Technology Co., Ltd** 3/F, Building A, Yongshenghui Industrial Park, Chuangye Road, Shiyan Street, Bao'an District, Shenzhen
Name and address of Manufacturer:	**Shenzhen CWG Technology Co., Ltd** 3/F, Building A, Yongshenghui Industrial Park, Chuangye Road, Shiyan Street, Bao'an District, Shenzhen
Product name:	**LED Strip**
Product model(s):	CWG-5050RGB-60D-5V, CWG-5050RGB-30D-12V, CWG-5050RGB-18D-12V, CWG-5050RGB-60D-24V, CWG-5050RGB-60D-12V, CWG-5050RGB-30D-5V, CWG-5050RGB-18D-5V, CWG-5050-60D-12V, CWG-5050-30D-12V, CWG-5050-60D-24V, CWG-HC5050RGB-60D-12V, CWG-HC5050RGB-30D-12V,CWG-HC5050RGB-60D-24V, CWG-HC5050-60D-12V, CWG-HC5050-30D-12V, CWG-HC5050-60D-24V, CWG-HC5050RGB-30D-5V, CWG-HC5050RGB-60D-5V, CWG-HC5050RGB-144D-5V, CWG-2835-60D-12V, CWG-2835-120D-12V, CWG-2835-60D-24V, CWG-2835-120D-24V, CWG-2835-60D-5V, CWG-2835-120D-5V
Product trademark:	创唯光

This verification confirms that the product meets the requirements of the following standard.
The conformity was demonstrated based on following standard(s) listed by European Commission as harmonized with Directive RoHS 2.0 Directive (EU) 2015/863 and (EU)2017/2102 amending Annex II to Directive 2011/65/EU

IEC 62321-1:2013	IEC 62321-3-1:2013
IEC 62321-4:2013/AMD1:2017	IEC 62321-5:2013
IEC 62321-6:2015	IEC 62321-7-1:2015
IEC 62321-7-2:2017	IEC 62321-8:2017
IEC 62321-2:2021	

The verification has been carried out in accordance with individual rules and conditions agreed with the applicant. Evaluation has been carried out in accordance with:

Test report(s) No.:	MK25070091P01-C01
Test conducted by:	TMC Testing Services (Shenzhen) Co., Ltd.
Verification issue date:	July 17, 2025

Notes:
This verification refers to the above mentioned product and its conformity in regards of above mentioned standard(s) was proven on test sample.
This verification does not imply meeting all essential requirements, assessment of the series-production or any other restricted Notified Bodies conformity assessment procedure appropriate for the product.
This verification holder shall use this verification in connection to verification of conformity and technical data relevant for the product the verification was issued.

TMC Testing Services (Shenzhen) Co., Ltd.
t:86-755-86642861 cert@tmc-lab.com www.tmc-lab.com
1st Floor, Block A1, Zone A, Xinshidai Gongrong Industrial Park, No. 2, Shihuan Road, Shiyan Street, Baoan District, Shenzhen, China

Lab Director
Vivian Jiang

Shenzhen BCTC Testing Co., Ltd.
1-2/F., Building B, Pengzhou Industrial Park, No.158, Fuyuan 1st Road,
Zhancheng, Fuhai Subdistrict, Bao'an District, Shenzhen, Guangdong, China

Test Verification of Conformity

Verification Number: BCTC2507635158C

Applicant : **Dongguan Huima Synthetic Electronics Co.,Ltd 3rd Floor, Bingding A, No.1 Jiangxing Road, Huangjiang Village, Huangjiang Town, Dongguan City, Guangdong Province China**

Manufacturer : **Dongguan Huima Synthetic Electronics Co.,Ltd 3rd Floor, Bingding A, No.1 Jiangxing Road, Huangjiang Village, Huangjiang Town, Dongguan City, Guangdong Province China**

Product Name : **2.4G conlroller**

Model/Type Reference : **HM-LY-2.4G**

Essential Requirement		Test Standards	Report No.
Art.3.1(a)	Safety	EN 61347-1:2015+A1:2021 EN 61347-2-11:2001+A1:2019	BCTC2507862687S
Art.3.1(a)	Health	EN 62479:2010 EN 50663:2017	BCTC2507635158-1E
Art.3.1(b)	EMC	ETSI EN 301 489-1 V2.2.3 (2019-11) ETSI EN 301 489-17 V3.3.1 (2024-09)	BCTC2507635158-2E
Art.3.2	Radio	ETSI EN 300 328 V2.2.2 (2019-07)	BCTC2507635158-3E

On the basis of the referenced test report(s), sample(s) tested of the above product have been found to comply with the standards harmonized with Annex II of Council Directive 2014/53/EU at the time the tests were carried out. Other standards and Directives may be relevant to the product. This verification is part of the full test report(s) and should be read in conjunction with it <them>.

Once compliance with all product relevant CE mark directives are verified, including any relevant e.g. risk assessment and production control, the manufacturer may indicate compliance by signing a Declaration of Conformity themselves and applying the mark to products identical to the tested sample(s).

CE

SHENZHEN BCTC TESTING CO., LTD.
BCTC
APPROVED
Report Seal

Manager
2025-08-11

This Verification is for the exclusive use of BCTC's client and is provided pursuant to agreement between BCTC and its client. BCTC's responsibility and liability are limited to the terms and conditions of the agreement. The observation and test results referenced in this Verification are relevant only to the sample tested. This Verification by itself does not imply that the material, product, or service is or has ever been under a BCTC certification program.

Certificate – Сертификат – 證明書 – Certificat – 증명서 – شهادة

Shenzhen ZKT Technology Co., Ltd.
1/F, No. 101, Building B, No. 6, Tangwei Community Industrial Avenue,
Fuhai Street, Bao'an District, Shenzhen, China

Certificate of Compliance

Certificate Number: ZKT-25070215184C

Certificate's Holder	:	**Dongguan Yihong Hardware Electronics Co., Ltd Room 1106, No.2, Shangheng Road, Chang' an Town, Dongguan**
Manufacturer	:	**Dongguan Yihong Hardware Electronics Co., Ltd Room 1106, No.2, Shangheng Road, Chang' an Town, Dongguan**
Trade Mark	:	**N/A**
Product	:	**LED controller**
Model(s)	:	**YH-6183** **YH-252, YH-284, YH-290, YH-287, YH-358, YH-360, YH-6180, YH-6184**

Requirement	Standard	Report No.
Art.3.1(a) Safety	BS EN IEC 62368-1:2024+A11:2024	ZKT-25070215185S
Art.3.1(a) Health	BS EN IEC 62311:2020 BS EN 50665:2017	ZKT-25070215184E-1
Art.3.1(b) EMC	ETSI EN 301 489-1 V2.2.3 (2019-11) ETSI EN 301 489-17 V3.3.0 (2024-07)	ZKT-25070215184E-2
Art.3.2 Radio	ETSI EN 300 328 V2.2.2 (2019-07)	ZKT-25070215184E-3

This Attestation of Compliance is issued on a voluntary basis for electrical equipment below the voltage limits of Radio Equipment Directive (RED) 2014/53/EU. The essential requirement are fulfilled accordingly based on the technical specifications applicable at the time of issuance.

UK CA

Shenzhen ZKT Technology Co., Ltd.
APPROVED
Manager
Jul. 07, 2026

This Certificate of Conformity is based on single evaluation of the submitted sample(s) of the above mentioned product. It does not imply an assessment of the whole product and relevant . Directives to be observed.

精准检测
PRECISE TESTING

CERTIFICATE OF CONFORMITY

No.: PTC25102309602C-EN01V02

Applicant	:	**Dongguan Yihong Hardware electronics Co., LTD**
Address	:	**Room 901, No. 2, Shangheng Road, Chang'an Town, Dongguan City, Guangdong Province, 523880 China**
Manufacturer	:	**Dongguan Yihong Hardware electronics Co., LTD**
Address	:	**Room 901, No. 2, Shangheng Road, Chang'an Town, Dongguan City, Guangdong Province, 523880 China**
Product Name	:	**LED Controler**
Model No.	:	**YH-289,YH-980 ,YH-284 ,YH-917 ,YH-818,YH-816,YH-6181,YH-358**

The submitted sample of the above equipment has been tested and found to comply with the following European Directive:

RoHS Directive 2011/65/EU & EU No.2015/863

The standard(s) used for showing compliance with the essential requirements:

Applicable Standard(s)	Test Report(s) Number
IEC 62321-1:2013, IEC 62321-2:2021 IEC 62321-3-1:2013, IEC 62321-3-2:2020 IEC62321-4: 2013+AMD1:2017 IEC 62321-5:2013 IEC 62321-6:2015, IEC 62321-7-1: 2015 IEC 62321-7-2: 2017, IEC 62321-8:2017	**PTC25102309602C-EN01V02**

This certificate is part of the full test report(s) and should be read in conjunction with it. This certificate is based on an evaluation of one sample of above mentioned product. It does not imply assessment of the production of the product. Without the written approval of Precise Testing & Certification (Guangdong) Co., Ltd., this certificate is not permitted to be reproduced, except in full. It is not permitted to use the test lab's logo.

PRECISE TESTING & CERTIFICATION (GUANGDONG) CO., LTD.

RoHS

.....

Jacky Ou
Manager
Date:Dec. 11, 2025

Precise Testing & Certification (Guangdong) Co., Ltd.
Building 1, No.6, Tongxin Road, Dongcheng Street,
Dongguan, Guangdong, China
Tel: 86 769 38808222 Web:www.ptc-testing.com
Mail: inquiry@ptc-testing.com