SKU HFCS-829WH

Product manual
Gobrauohsanwoisung
Manuol du produit
Manual dol produoto
Manualo dol prodotto

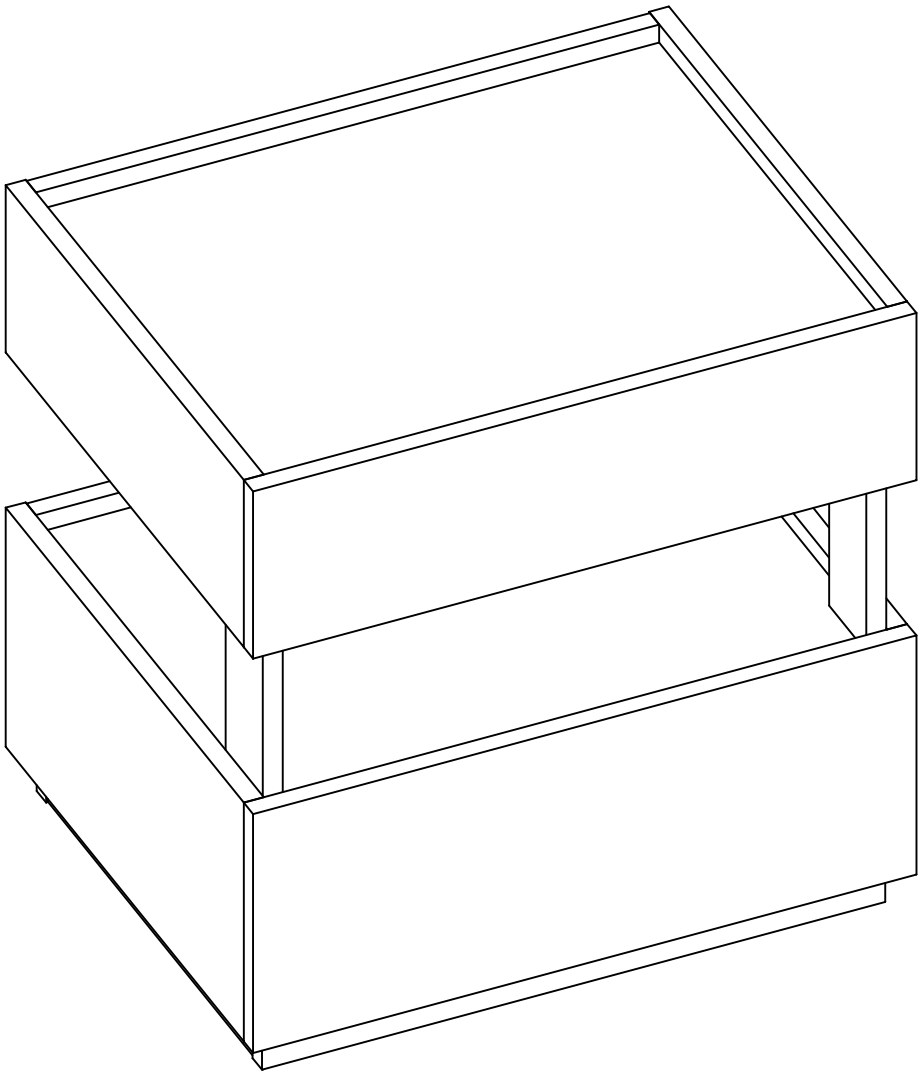

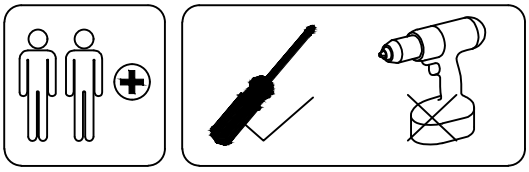

[DE]

Warnung: Lesen Sie die Anleitung vor dem Zusammenbau bitte vollständig durch. Überprüfen Sie, ob Sie alle auf den Seiten aufgeführten Komponenten und Werkzeuge haben.

Warnung: Legen Sie alle Teile auf eine ebene Fläche. Legen Sie eine weiche Decke oder Ähnliches darunter, um sie vor Kratzern oder Flecken zu schützen. Vermeiden Sie es, Komponenten über den Boden zu ziehen oder zu schieben.

Warnung: Überprüfen Sie regelmäßig alle Beschläge und Befestigungen, um sicherzustellen, dass sie sicher sind und um Unfälle zu vermeiden. Wenn Teile fehlen, kaputt, beschädigt oder abgenutzt sind, verwenden Sie das Produkt nicht weiter, bis es mit vom Hersteller autorisierten Teilen repariert wurde.

Warnung: Lassen Sie Kinder nicht auf die Möbel klettern, da dies zum Umkippen und zu schweren Verletzungen führen kann. Bauen Sie die Möbel außerhalb der Reichweite von Kindern zusammen.

Warnung: Stellen Sie die Möbel nicht in die Nähe von Feuerquellen oder heißen Gegenständen, um Brandgefahr zu vermeiden.

Warnung: Reinigen Sie die Möbel mit einem feuchten Tuch oder Alkohol. Verwenden Sie keine Reinigungsmittel mit ätzenden Chemikalien.

Warnung: Dieses Produkt ist mit einer Kippschutzvorrichtung ausgestattet. Bitte installieren Sie diese Vorrichtung unbedingt, um unnötige Verletzungen durch Umkippen zu vermeiden.

[EN]

Warning: Please read instructions fully before starting assembly.Check you have all the components and tools listed on pages.

Warning: Please place all parts on a flat surface.Place a soft blanket or similar underneath to protect against scratches or stains.Avoid dragging or sliding components across the floor.

Warning: Regularly check all fittings and fastenings to ensure they are secure and to prevent accidents.If any parts are missing, broken, damaged, or worn, discontinue use of the product until repairs have been made using factory authorized parts.

Warning: Do not allow children to climb on the furniture as this may result in tipping and serious personal injury.Assemble the furniture away from the reach of children.

Warning: Do not place furniture close to fire sources or high-temperature objects to avoid the risk of fire

Warning: Clean furniture with a damp cloth or alcohol, avoid using cleaning agents containing corrosive chemicals.

Warning: This product is equipped with an anti-tilt device. Please be sure to install this device to prevent unnecessary injuries caused by tipping.

[FR]

Avertissement : Veuillez lire entièrement les instructions avant de commencer l'assemblage. Vérifiez que vous disposez de tous les composants et outils répertoriés sur les pages.

Avertissement : Veuillez placer toutes les pièces sur une surface plane. Placez une couverture douce ou similaire en dessous pour les protéger des rayures ou des taches. Évitez de faire glisser les composants sur le sol.

Avertissement : Vérifiez régulièrement tous les raccords et fixations pour vous assurer qu'ils sont bien fixés et pour éviter les accidents. Si des pièces manquent, sont cassées, endommagées ou usées, cessez d'utiliser le produit jusqu'à ce que des réparations aient été effectuées à l'aide de pièces autorisées par l'usine.

Avertissement : Ne laissez pas les enfants grimper sur les meubles car cela pourrait entraîner un basculement et des blessures graves. Assemblez les meubles hors de portée des enfants.

Avertissement : Ne placez pas les meubles à proximité de sources de feu ou d'objets à haute température pour

éviter tout risque d'incendie.
Avertissement : Nettoyez les meubles avec un chiffon humide ou de l'alcool, évitez d'utiliser des produits de nettoyage contenant des produits chimiques corrosifs.
Avertissement : Ce produit est équipé d'un dispositif anti-basculement. Assurez-vous d'installer ce dispositif pour éviter les blessures inutiles causées par un basculement.

[IT]
Attenzione: leggere attentamente le istruzioni prima di iniziare il montaggio. Verificare di avere tutti i componenti e gli strumenti elencati nelle pagine.
Attenzione: posizionare tutte le parti su una superficie piana. Posizionare una coperta morbida o simile sotto per proteggere da graffi o macchie. Evitare di trascinare o far scivolare i componenti sul pavimento.
Attenzione: controllare regolarmente tutti i raccordi e i dispositivi di fissaggio per assicurarsi che siano sicuri e per prevenire incidenti. Se alcune parti sono mancanti, rotte, danneggiate o usurate, interrompere l'uso del prodotto fino a quando non siano state eseguite le riparazioni utilizzando parti autorizzate dalla fabbrica.
Attenzione: non consentire ai bambini di arrampicarsi sui mobili poiché ciò potrebbe causare ribaltamenti e gravi lesioni personali. Montare i mobili lontano dalla portata dei bambini.
Attenzione: non posizionare i mobili vicino a fonti di fuoco o oggetti ad alta temperatura per evitare il rischio di incendio
Attenzione: pulire i mobili con un panno umido o alcol, evitare di utilizzare detergenti contenenti sostanze chimiche corrosive.
Attenzione: questo prodotto è dotato di un dispositivo antiribaltamento. Assicurarsi di installare questo dispositivo per prevenire lesioni inutili causate dal ribaltamento.

[ES]
Advertencia: Lea las instrucciones completamente antes de comenzar el montaje. Compruebe que tiene todos los componentes y herramientas que se enumeran en las páginas.
Advertencia: Coloque todas las piezas sobre una superficie plana. Coloque una manta suave o algo similar debajo para protegerlas de rayones o manchas. Evite arrastrar o deslizar los componentes por el piso.
Advertencia: Verifique regularmente todos los accesorios y fijaciones para asegurarse de que estén seguros y evitar accidentes. Si falta alguna pieza, está rota, dañada o desgastada, deje de usar el producto hasta que se hayan realizado las reparaciones con piezas autorizadas de fábrica.
Advertencia: No permita que los niños se suban a los muebles, ya que esto puede provocar que se vuelquen y lesiones personales graves. Monte los muebles fuera del alcance de los niños.
Advertencia: No coloque los muebles cerca de fuentes de fuego u objetos de alta temperatura para evitar el riesgo de incendio.
Advertencia: Limpie los muebles con un paño húmedo o alcohol, evite usar agentes de limpieza que contengan químicos corrosivos.
Advertencia: Este producto está equipado con un dispositivo antivuelco. Asegúrese de instalar este dispositivo para evitar lesiones innecesarias causadas por vuelcos.

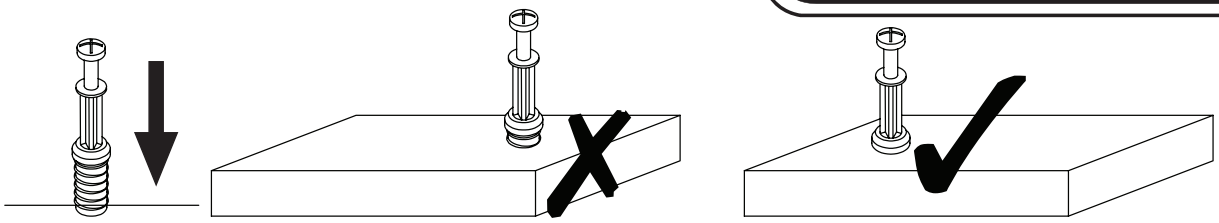

EN_QUICKFIT: Tighten quickfit until shoulder is flush with panel.Do not overtighten or undertighten.
FR_RACCORD RAPIDE:Faites serrer le raccord rapide jusqu'à ce que l'épaulement soit parfaitement encastré dans le panneau. Il ne faut ni trop serrer ni insuffisamment serrer.
ES_QUICKFIT:Apriete quickfit hasta que el hombre se descargue con el panel. NO lo sobreapriete ni lo apriete poco.
DE_QUICKFIT:Ziehen Sie den Quickfit fest, bis die Schulter mit der Platte bündig ist. Bitte nicht zu fest oder zu schwach anziehen.
IT_MONTAGGIO RAPIDO:Stringere il montaggio rapido fino a quando la spalla è a filo con il pannello, non stringere troppo o troppo poco.

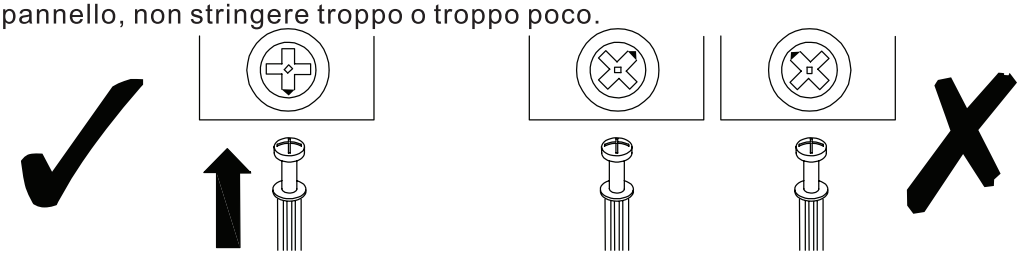

EN_CAM LOCK: When fitting cam lock, ensure starting position is correct before you insert connecting quickfit.
FR_SERRURE BATTEUSE:Avant d'insérer la serrure batteuse, veillez à la bonne orientation avant d'insérer le raccord rapide.
ES_CIERRE DE LA CÁMARA:Cuando instale el cierre de la cámara, asegúrese de que la posición de inicio es correcta antes de que inserte el quickfit conector.
DE_CAM-LOCK:Achten Sie bei der Montage des Cam-Locks auf die richtige Ausgangsposition, bevor Sie den Quickfit einsetzen.
IT_BLOCCAGGIO A CAMMA:Quando si monta il bloccaggio a camma, assicurarsi che la posizione iniziale sia corretta prima di inserire il montaggio rapido di collegamento.

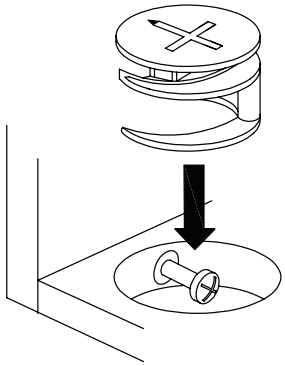

EN_ Quickfit head should be in the centre of the cam lock when the two panels are joined.
Cam lock should be inserted before quickfit.
FR_ Lorsque les deux panneaux sont assemblés, la tête du raccord rapide doit reposer au centre de la serrure batteuse.
Il faut insérer la serrure batteuse avant le raccord rapide.
ES_ El cabezal del quickfit debe estar en el centro del cierre de la cámara cuando se unan los dos paneles.
Se debe insertar el cierre de la cámara antes que el quickfit.
DE_ Der Quickfit-Kopf sollte sich in der Mitte des Cam-Locks befinden, wenn die beiden Platten zusammengefügt sind.
Der Cam-Lock sollte vor dem Quickfit eingesetzt werden.
IT_ La testa del montaggio rapido deve trovarsi al centro del bloccaggio a camma quando i due pannelli sono uniti.
Il Bloccaggio a Camma deve essere inserito prima del montaggio rapido.

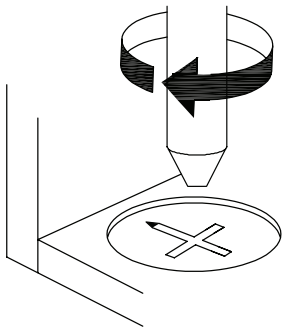

EN_ Turn cam lock clockwise to tighten.
FR_ Faites tourner la serrure batteuse dans le sens des aiguilles d'une montre pour la resserrer.
ES_ Gire el cierre de la cámara en sentido horario para apretarlo.
DE_ Drehen Sie den Cam-Lock im Uhrzeigersinn, um ihn festzuziehen.
IT_ Ruotare il bloccaggio a camma in senso orario per stringere.

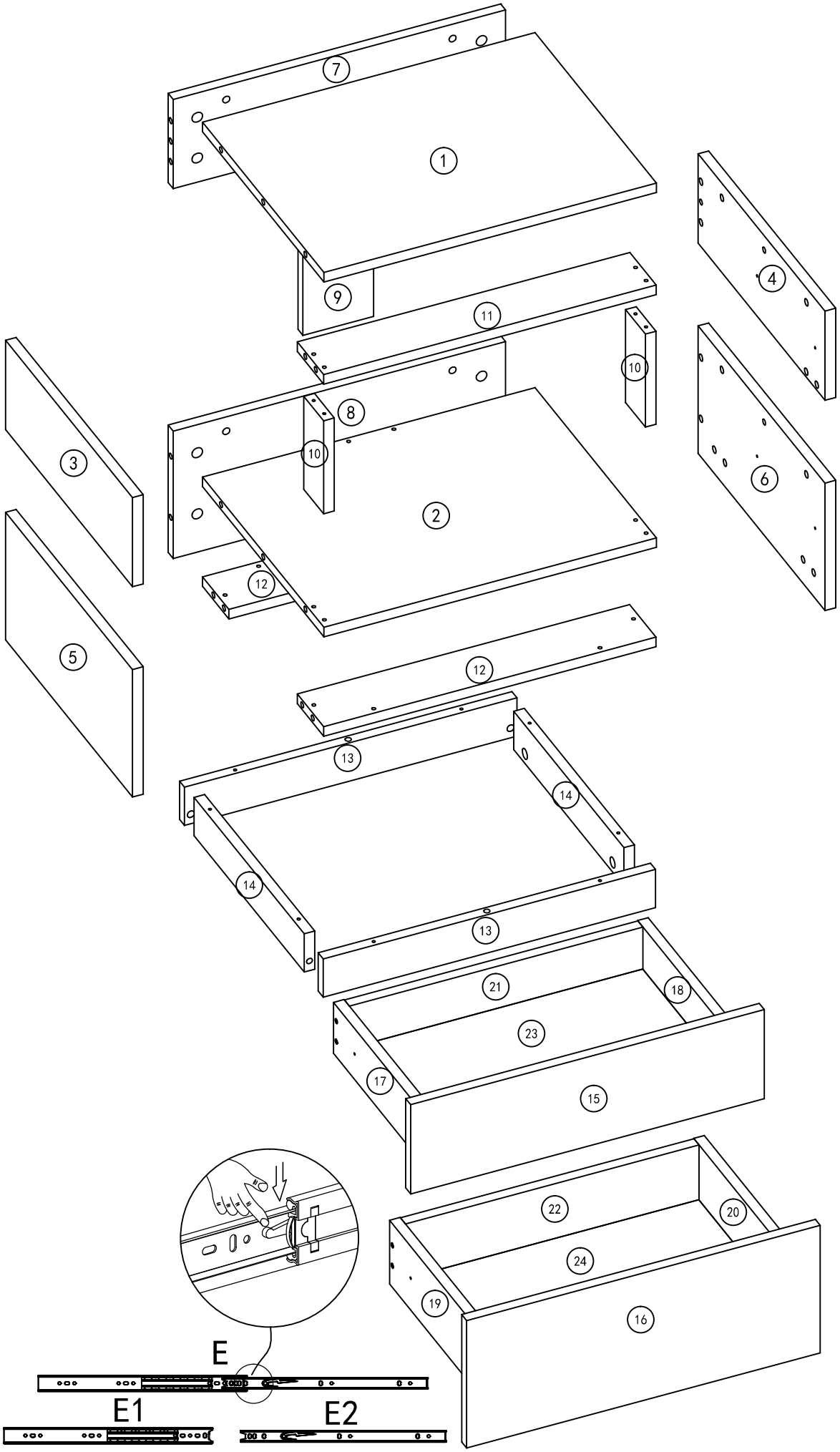

A	46PCS
B	46PCS Φ15*11
C	8PCS Φ8*40
D	18PCS M5*40
E	2SET 275
F	8PCS M3.5*35
G	2PCS M3.5*25
H	18PCS M3.5*14
K	1PCS
L	8PCS
M	2PCS

1

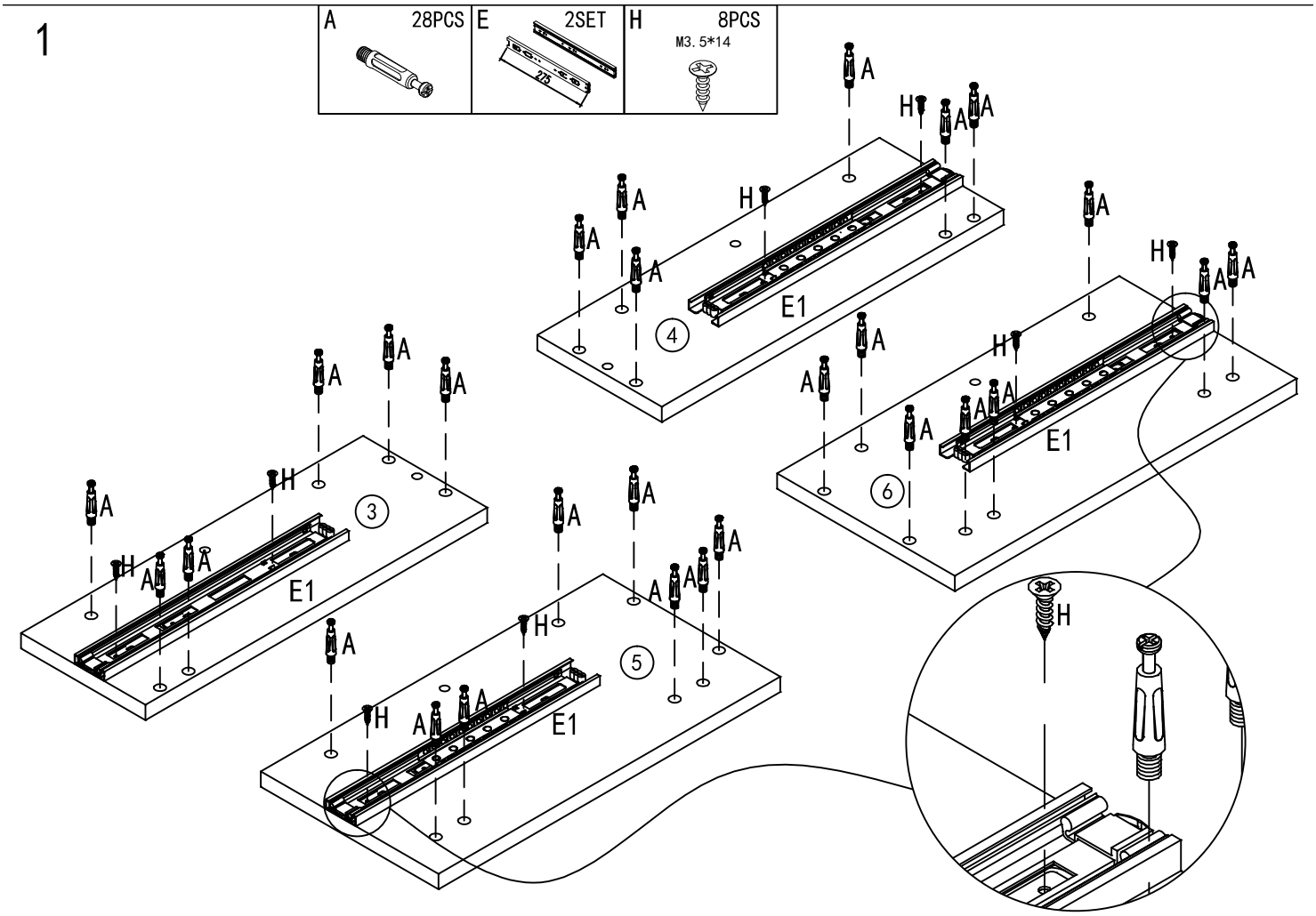

2

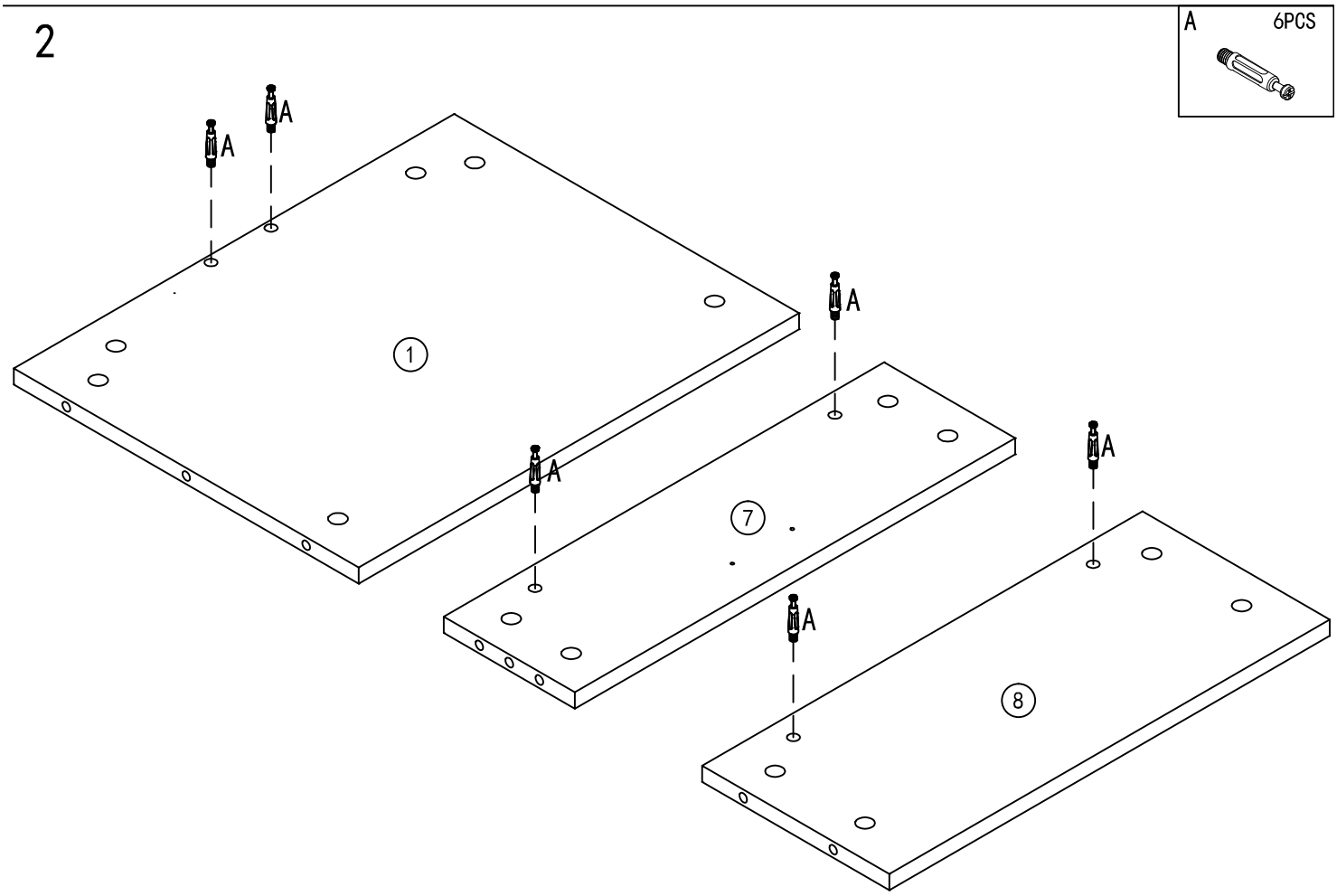

3

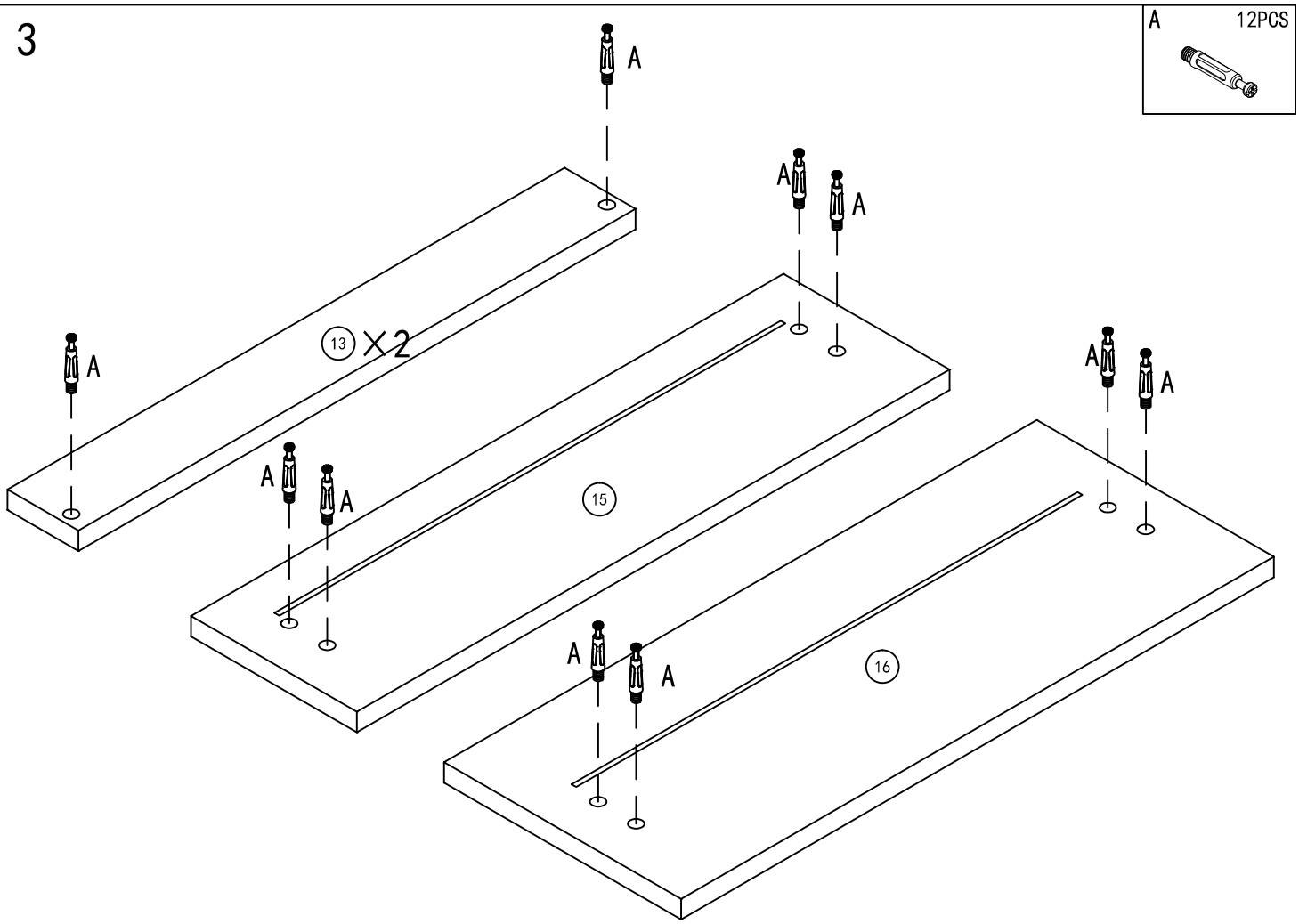

4

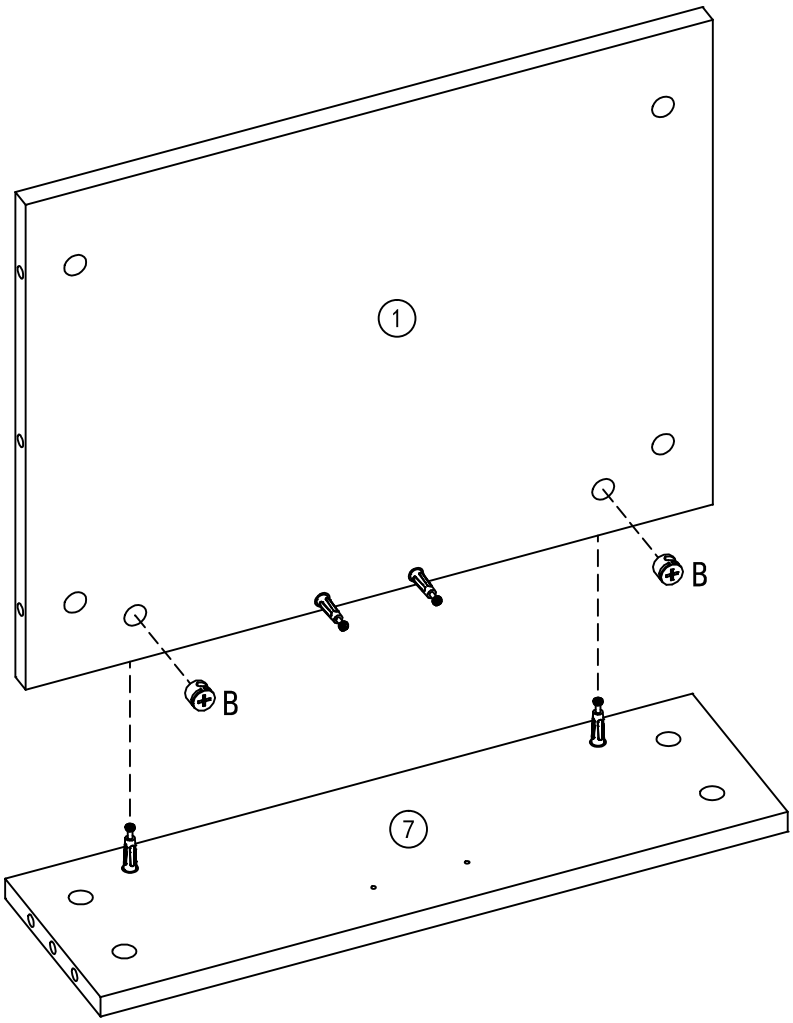

5

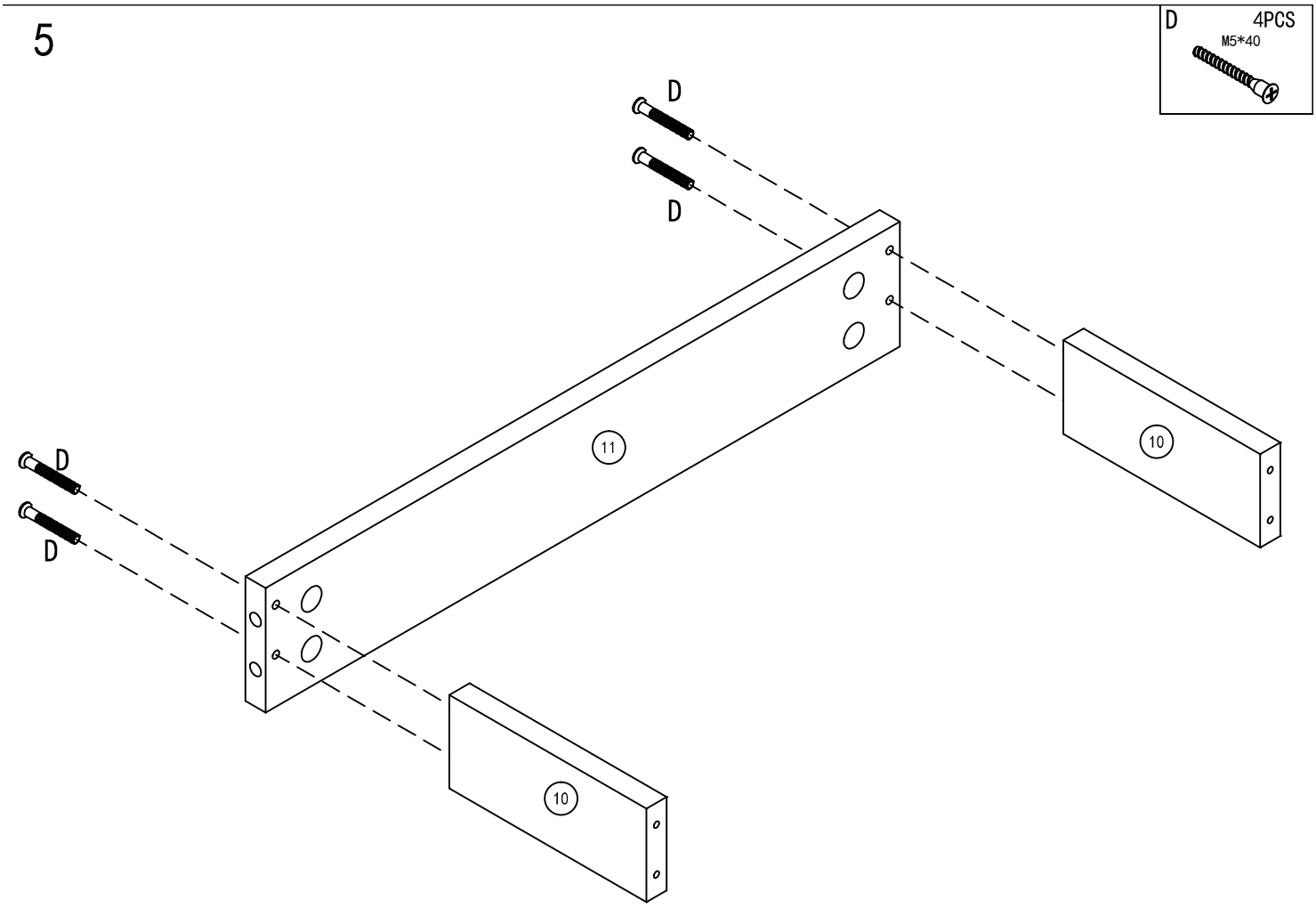
D 4PCS
M5*40
D
D
D
D
11
10
10

6

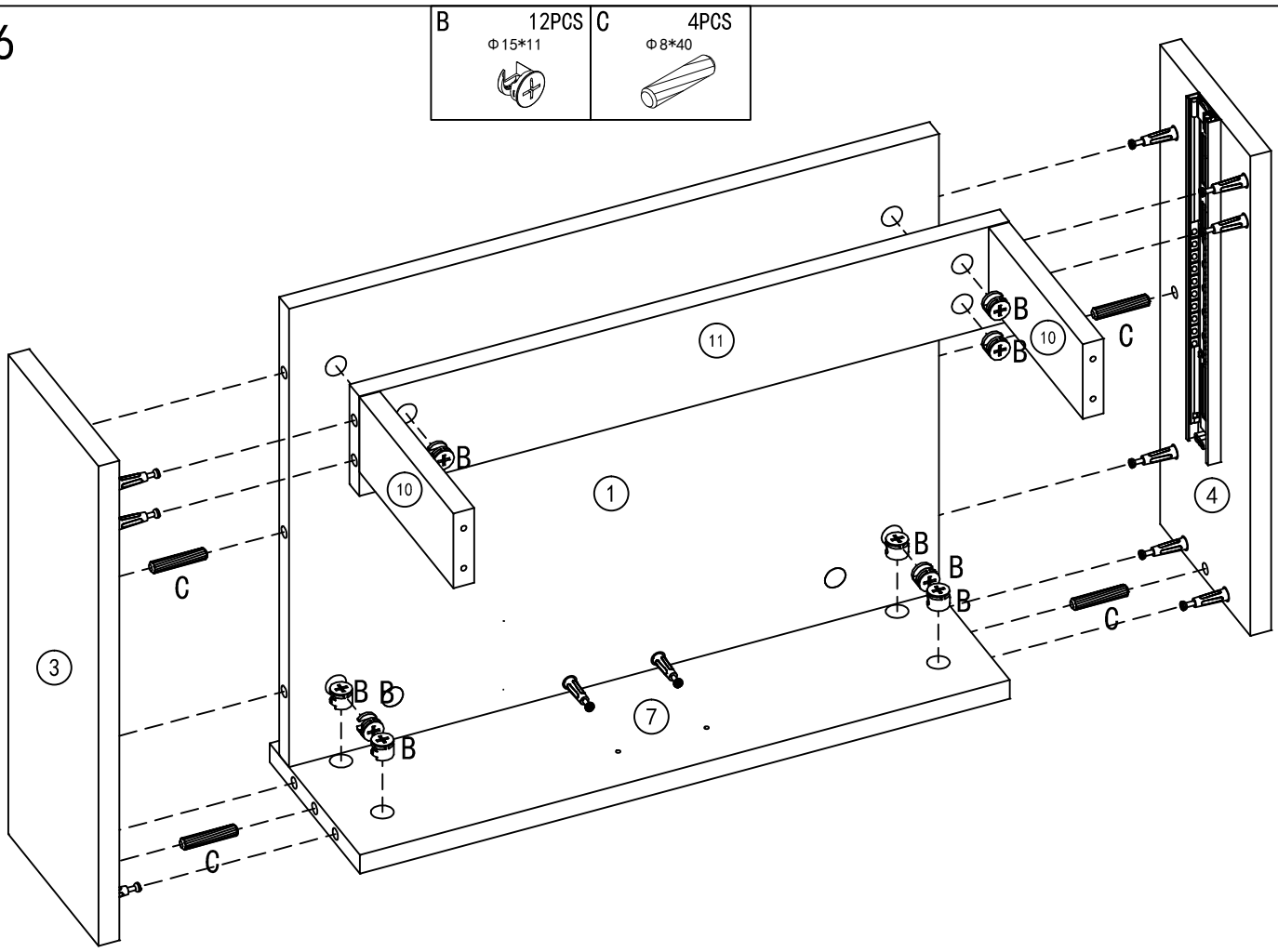
B 12PCS
Φ15*11
C 4PCS
Φ8*40
11
10
10
1
3
4
7
B
C

7

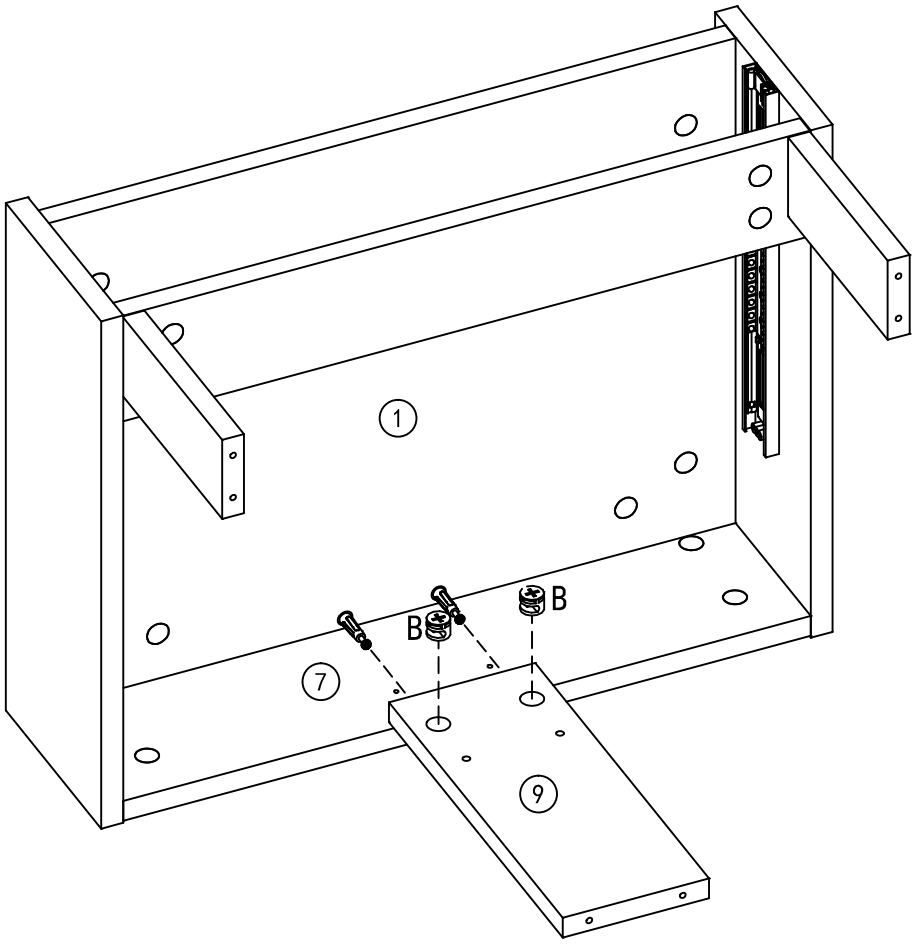

8

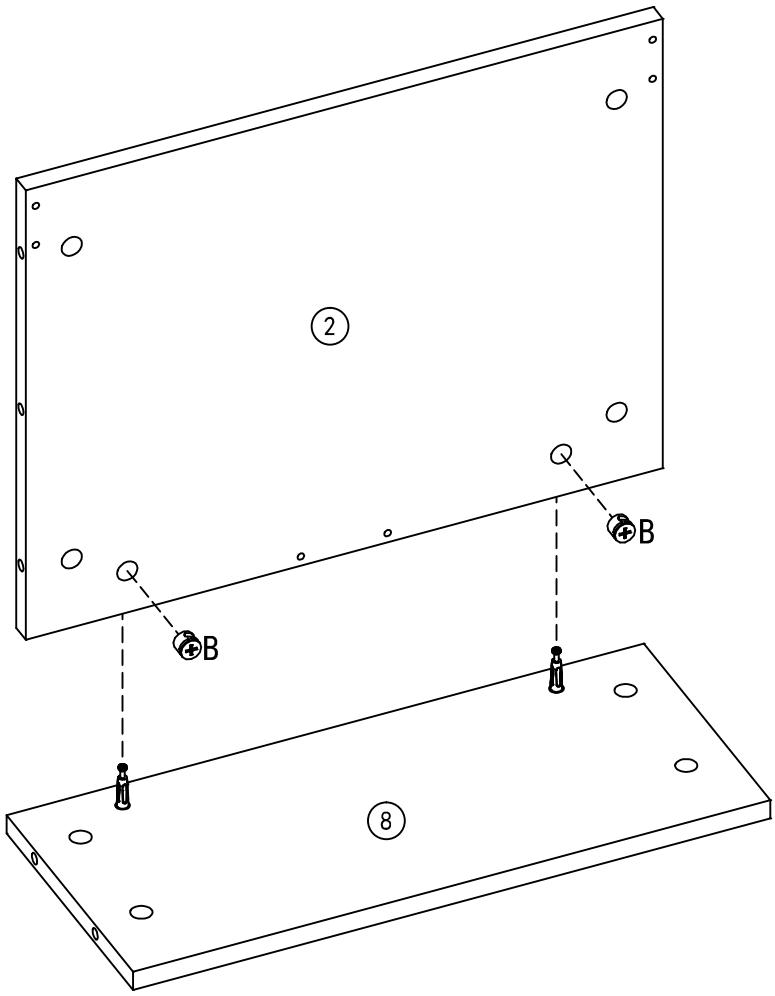

9

D	6PCS
M5*40	

G	2PCS
M3. 5*25	

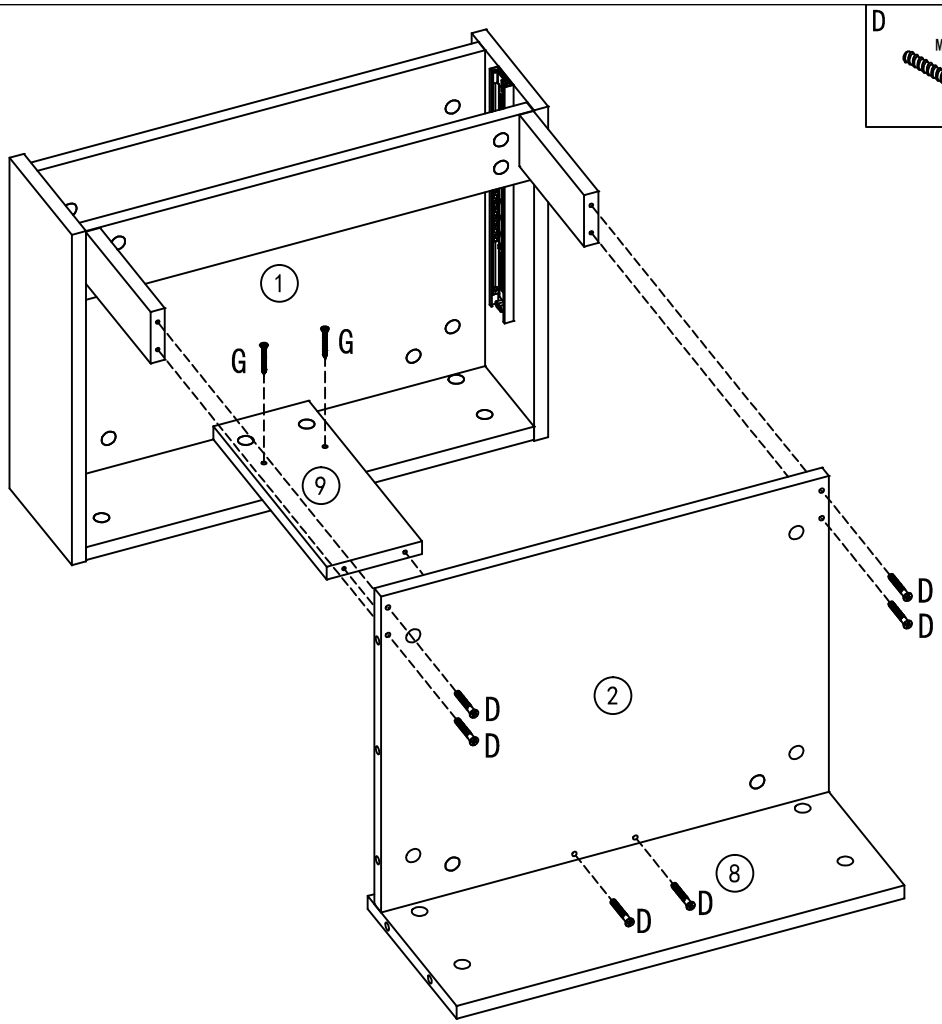

10

B	4PCS
Φ15*11	

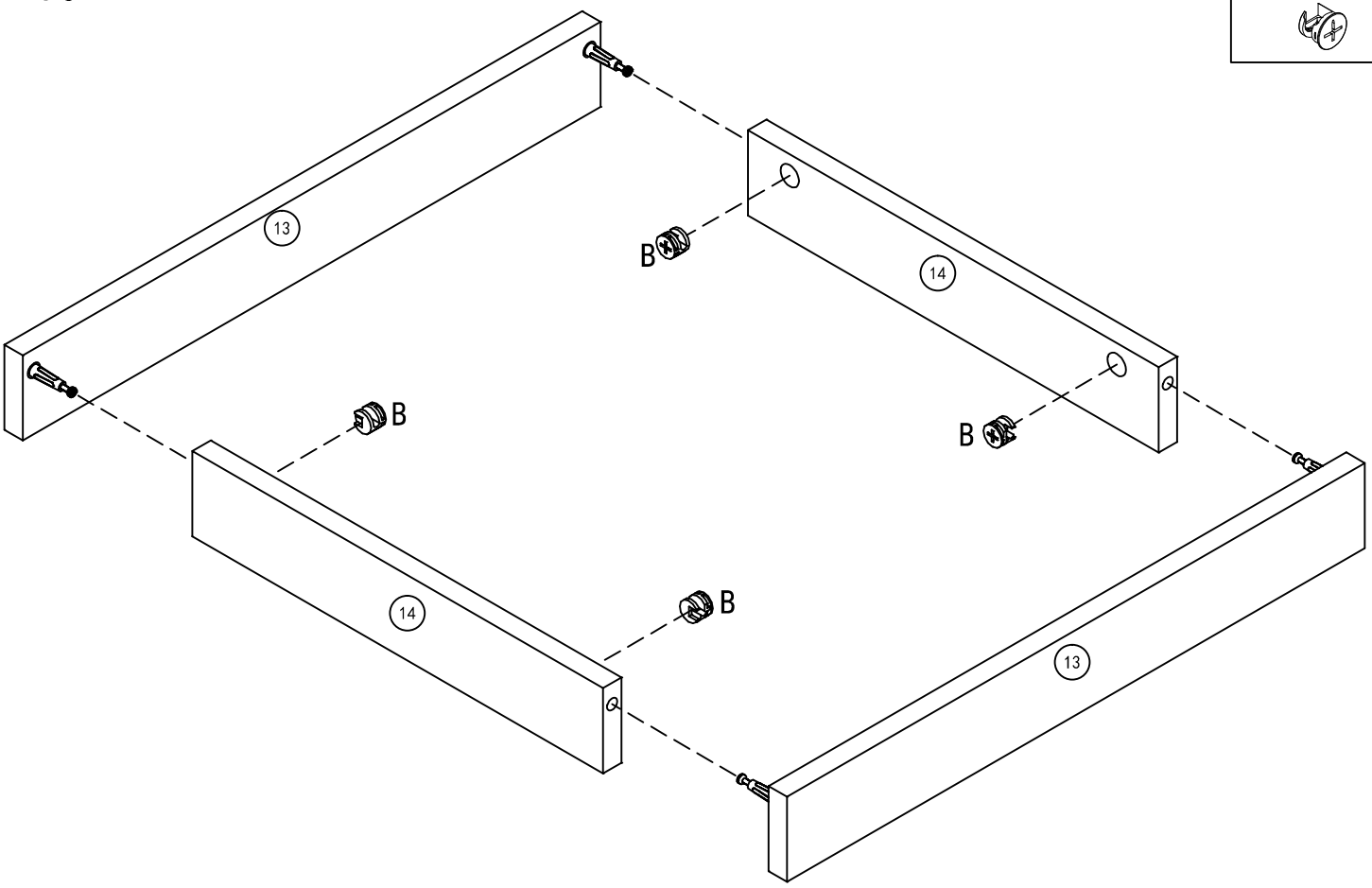

11

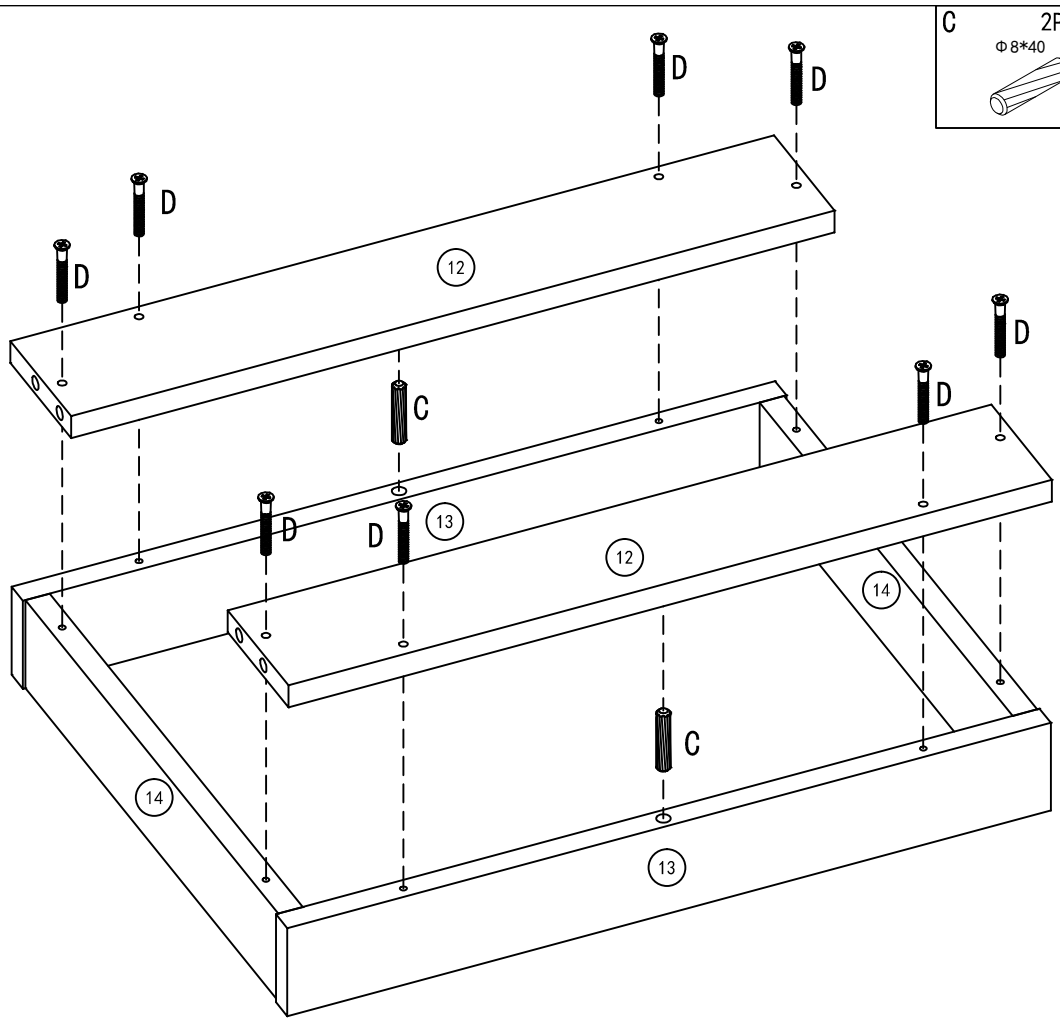
C 2PCS
Φ8*40
D 8PCS
M5*40
D
D
D
D
D
D
D
C
C
12
12
13
13
14
14

12

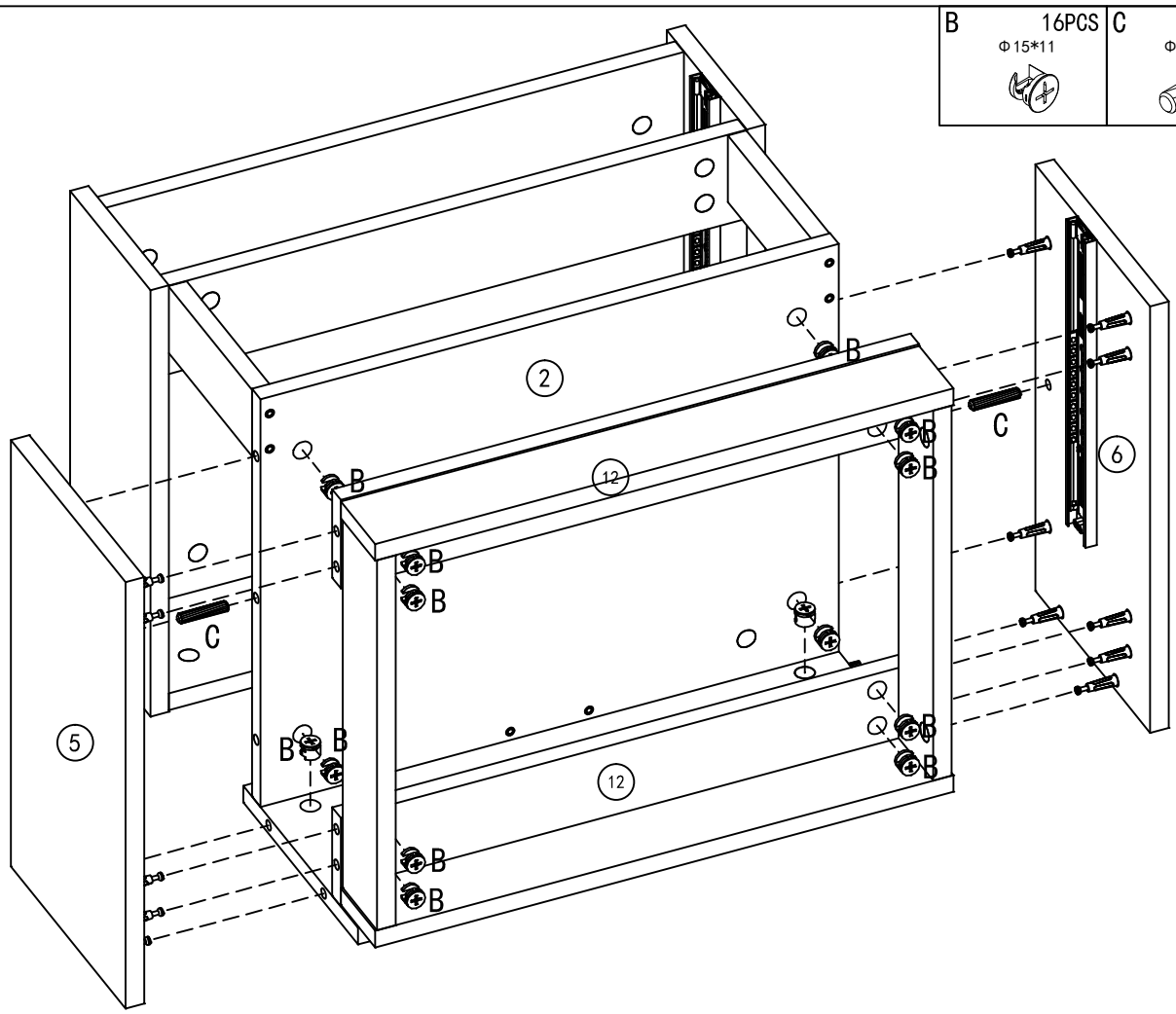
B 16PCS
Φ15*11
C 2CS
Φ8*40
B
C
2
12
12
5
6

13

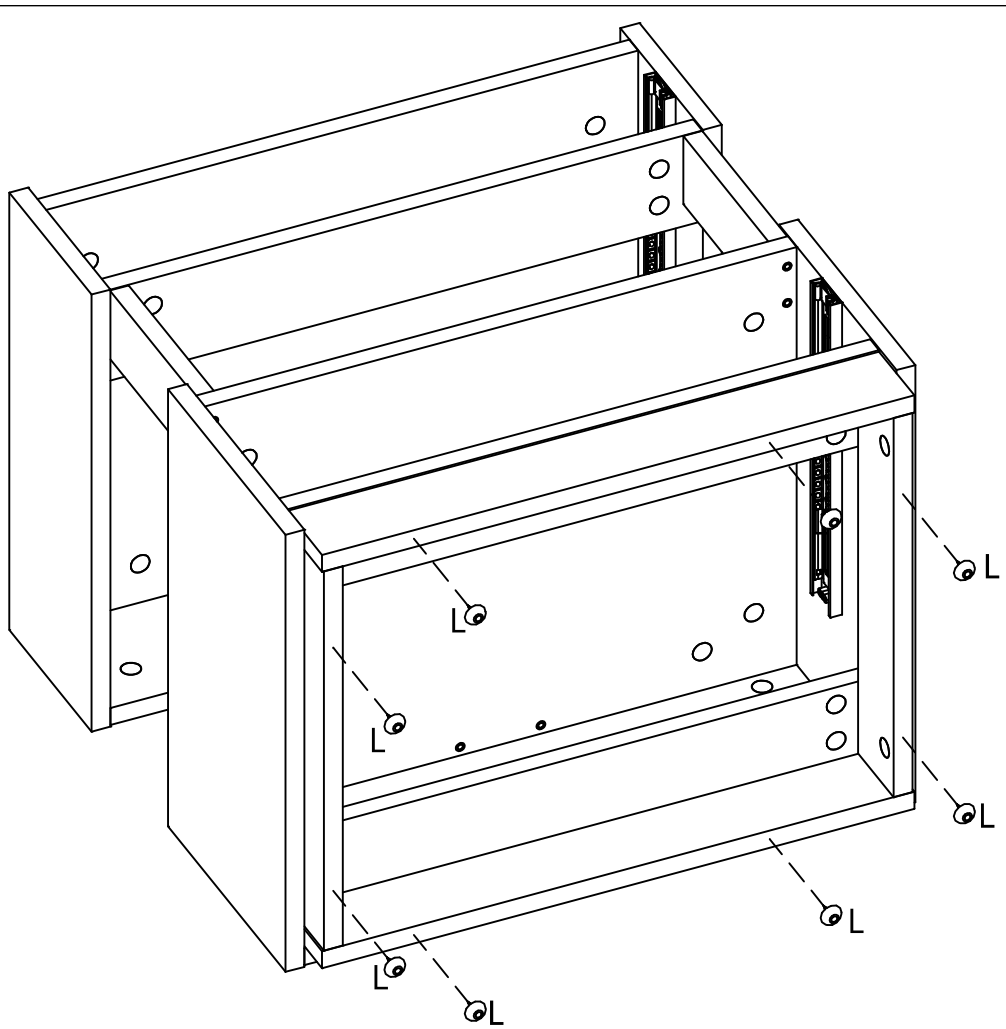

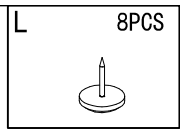

14

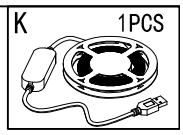

EN:nload the APP and operate it on the APP port.
DE:Laden Sie die App herunter und nutzen Sie die Funktionen direkt in der App-Oberfläche.

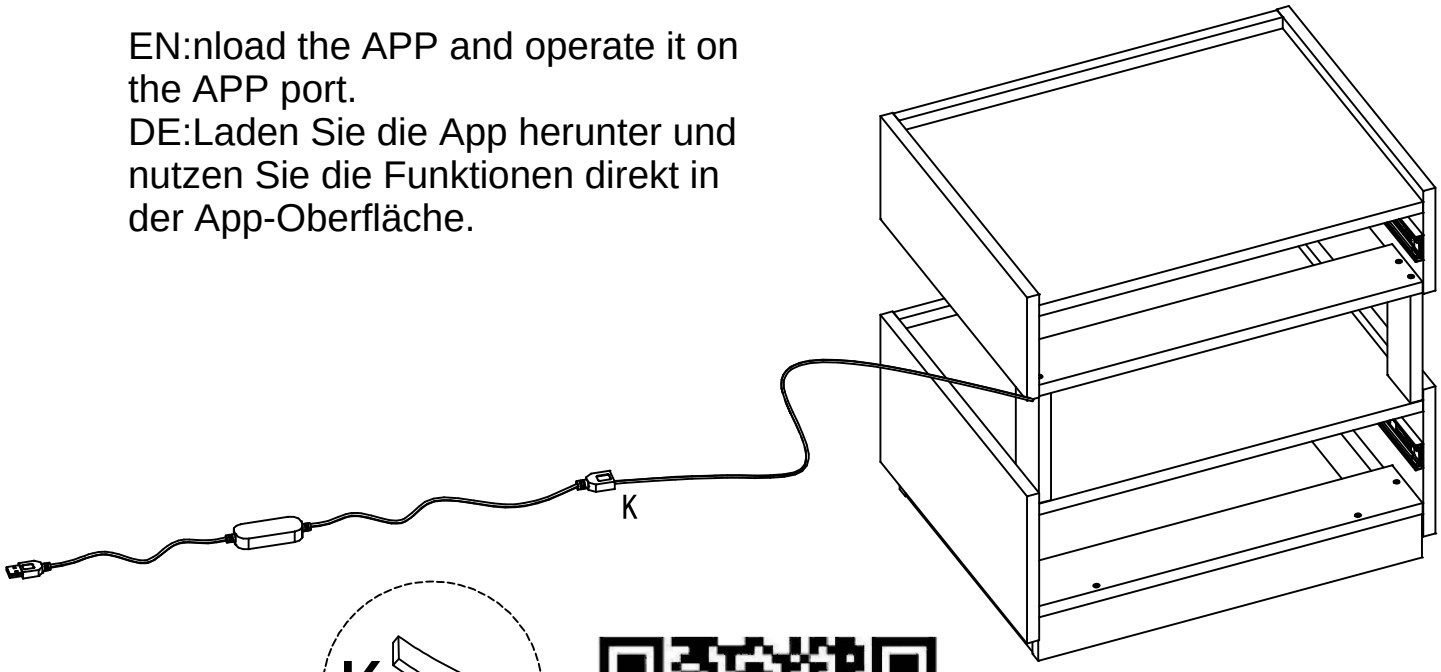

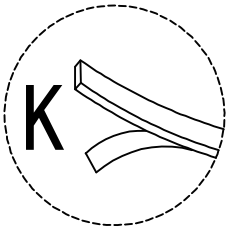

15

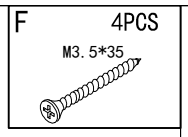
F
4PCS
M3.5*35

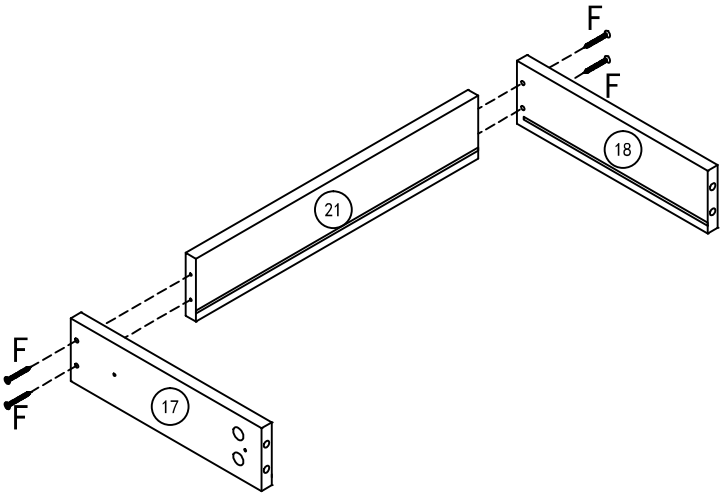
F
F
18
21
F
F
17

16

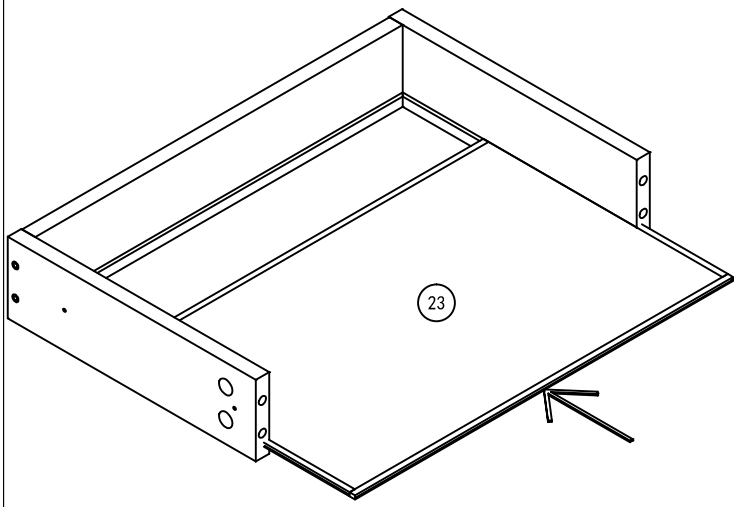
23

17

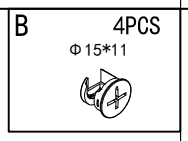
B
4PCS
Φ15*11

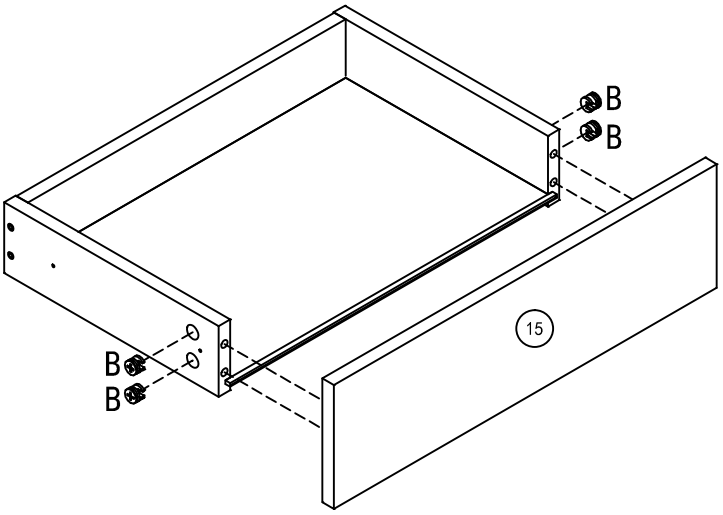
B
B
B
B
15

18

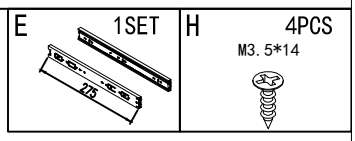
E
1SET
H
4PCS
M3.5*14

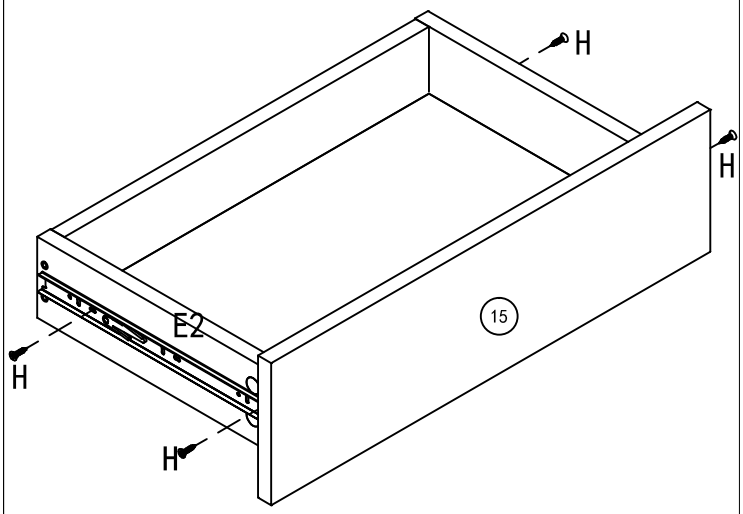
H
H
E2
15
H
H

19

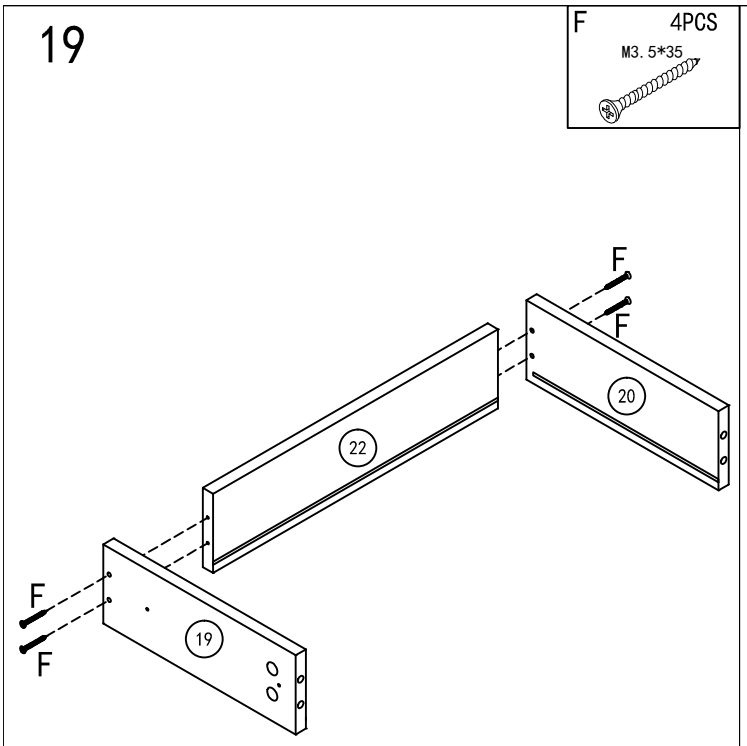
F 4PCS
M3.5*35
F
F
20
22
F
F
19

20

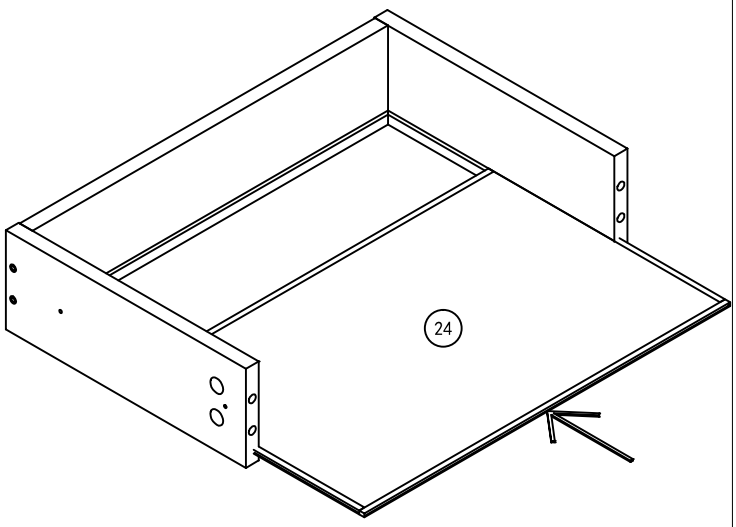
24

21

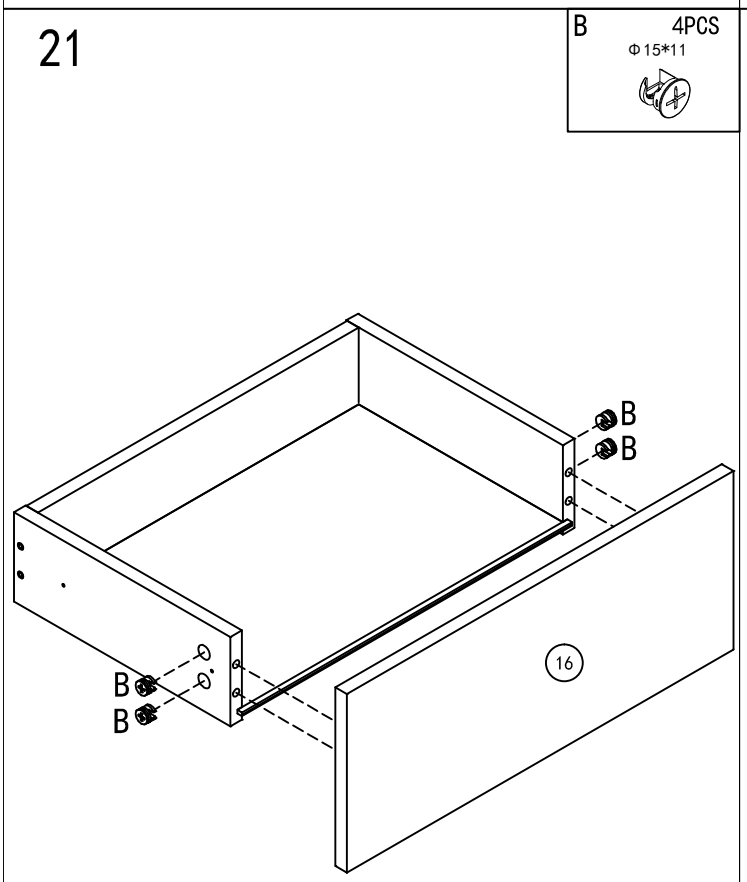
B 4PCS
Φ15*11
B
B
16
B
B

22

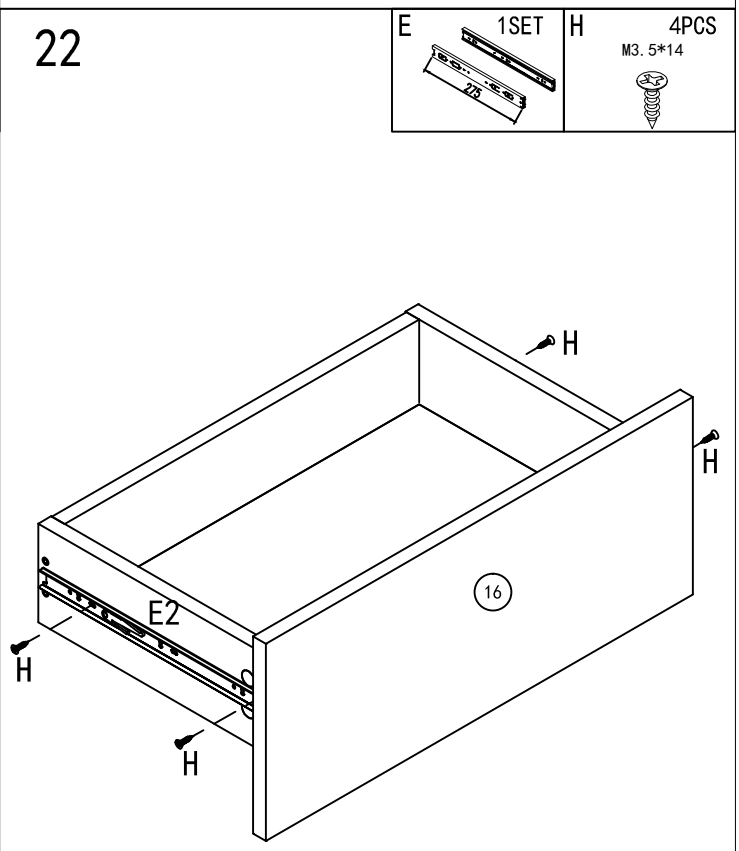
E 1SET
H 4PCS
M3.5*14
H
H
16
E2
H
H

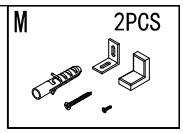
M
2PCS

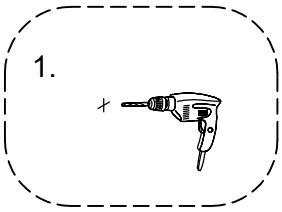
1.

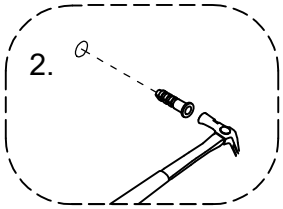
2.

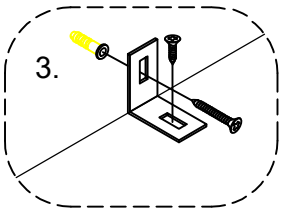
3.

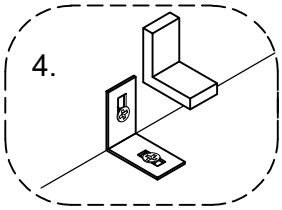
4.

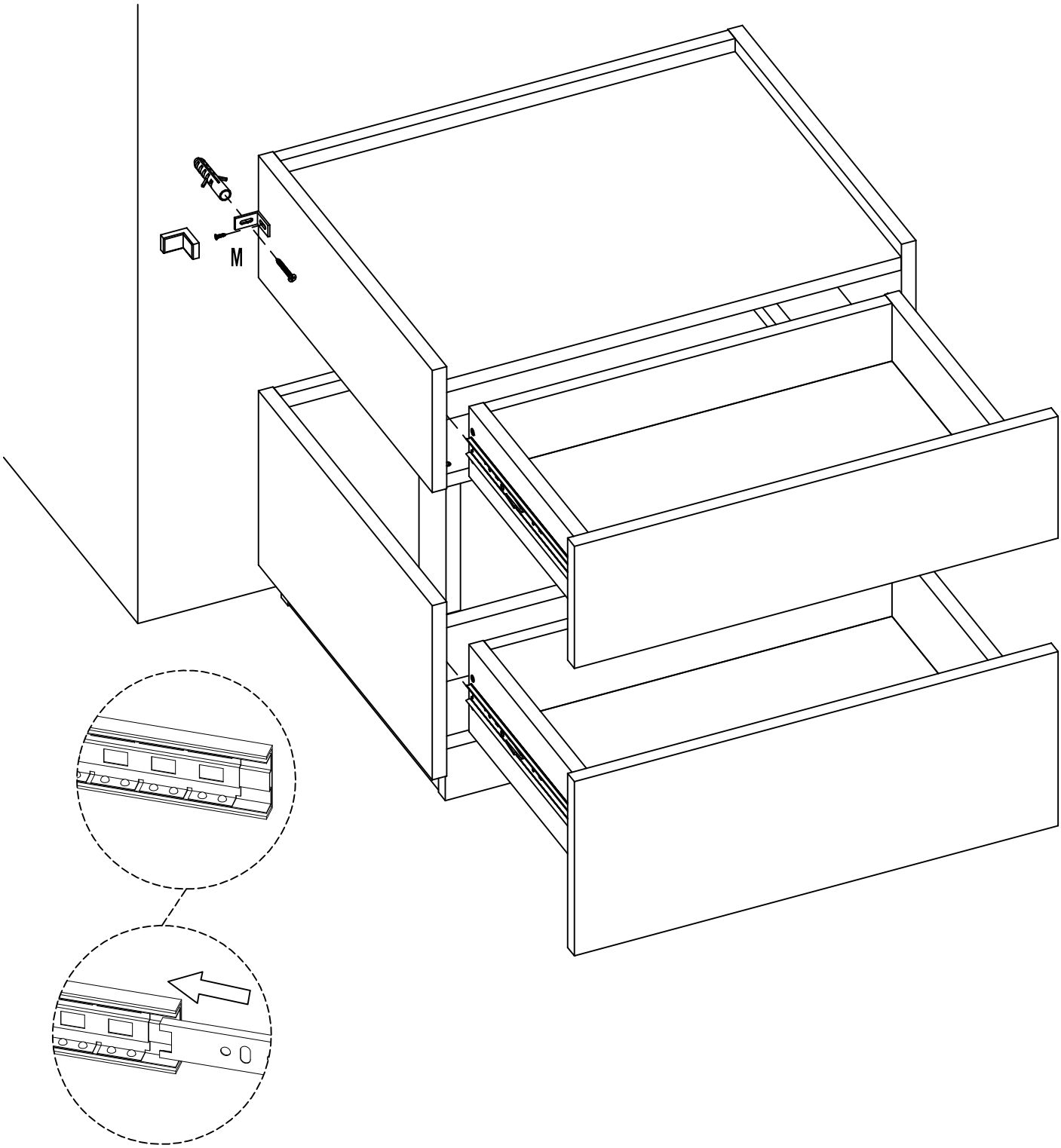
M

EN:Battery Safety Instructions

1.Do not dispose of used button batteries or remote controls in household trash. To protect the environment and prevent hazardous leakage, please follow these guidelines:

2.Remove button batteries after use and take them to a local battery recycling point or hazardous waste collection site.

3.Do not burn or dismantle the batteries to avoid explosion or toxic release.

4.If the remote control is no longer in use, please deliver it to a certified electronics recycling facility to promote resource reuse.

5.Keep out of reach of children to prevent accidental ingestion or injury.

6.This product does not include batteries; please purchase them separately. The compatible button cell model for the remote control is CR2025 3V.

7.If the light strip is not working, please try replacing the battery first. If the issue persists, contact the seller for assistance.

8.**Keep the remote control away from children — keep it away from children!** If the battery is accidentally swallowed, seek medical attention immediately.

DE:Batteriesicherheitshinweise

1. Entsorgen Sie gebrauchte Knopfzellen oder Fernbedienungen nicht im Hausmüll. Um die Umwelt zu schützen und gefährliche Leckagen zu vermeiden, beachten Sie bitte die folgenden Hinweise:
2. Entfernen Sie die Knopfzelle nach dem Gebrauch und bringen Sie sie zu einer örtlichen Batteriesammelstelle oder einem Sondermüllentsorgungszentrum.
3. Batterien nicht verbrennen oder zerlegen, um Explosionen oder die Freisetzung giftiger Stoffe zu vermeiden.
4. Wenn die Fernbedienung nicht mehr verwendet wird, bringen Sie sie zu einer zertifizierten Elektronik-Recyclingstelle, um eine Wiederverwertung zu ermöglichen.

5. Außerhalb der Reichweite von Kindern aufbewahren, um versehentliches Verschlucken oder Verletzungen zu verhindern.

6.Dieses Produkt enthält keine Batterien. Bitte kaufen Sie diese separat. Das kompatible Knopfzellenmodell für die Fernbedienung ist CR2025, 3V.

7.Wenn der Lichtstreifen nicht funktioniert, versuchen Sie zunächst, die Batterie zu wechseln. Besteht das Problem weiterhin, kontaktieren Sie bitte den Verkäufer.

8.**Halten Sie die Fernbedienung unbedingt von Kindern fern — unbedingt fernhalten!** Wird die Batterie versehentlich verschluckt, suchen Sie sofort medizinische Hilfe auf.

FR:Instructions de sécurité pour les piles

1. Ne jetez pas les piles bouton usagées ou les télécommandes à la poubelle ménagère. Pour protéger l ’ environnement et éviter tout risque de fuite dangereuse, veuillez suivre les consignes suivantes :
2. Retirez les piles bouton après usage et déposez-les dans un point de collecte local ou un centre de déchets dangereux.
3. Ne brûlez pas et ne démontez pas les piles, cela pourrait entraîner une explosion ou libérer des substances toxiques.
4. Si la télécommande n’est plus utilisée, déposez-la dans un centre de recyclage agréé pour appareils électroniques, afin de favoriser la réutilisation des ressources.
5. Gardez hors de portée des enfants pour éviter tout risque d’ingestion accidentelle ou de blessure.

6.Ce produit ne contient pas de pile. Veuillez l’acheter séparément. Le modèle de pile bouton compatible pour la télécommande est CR2025, 3V.

7.Si le ruban LED ne fonctionne pas, essayez d’abord de remplacer la pile. Si le problème persiste, contactez le vendeur.

8.**Tenez la télécommande éloignée des enfants — éloignez-la vraiment !** En cas d’ingestion accidentelle de la pile, consultez immédiatement un médecin.

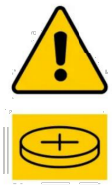

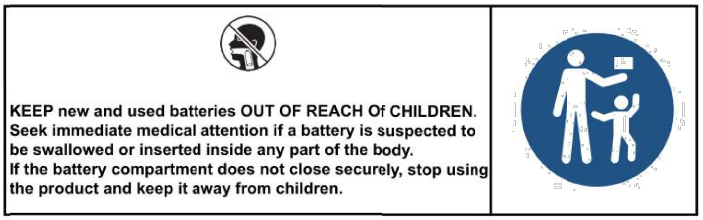

If a battery has been ingested, or there is a possibility one might have been ingested, please seek medical attention and inform the medical authorities that you suspect battery ingestion.

It's not always clear when a child has swallowed a button battery, as there are no specific symptoms.However, they might:

- **cough, gag, or drool;**
- **seem to have a stomach bug or virus;**
- **vomit;**
- **complain of pain in their stomach, chest, or throat;**
- **appear tired or sluggish; and**
- **lose their appetite.**

Since the signs aren't obvious, it's important to keep a close eye on loose, used, or spare button batteries in your home, as well as the products that contain them.

Verification of compliance Verification of compliance Verification of compliance Verification of compliance

Verification of Compliance

Verification No.:	MK25070091P01-C01
Name and address of Applicant:	**Shenzhen CWG Technology Co., Ltd** 3/F, Building A, Yongshenghui Industrial Park, Chuangye Road, Shiyan Street, Bao'an District, Shenzhen
Name and address of Manufacturer:	**Shenzhen CWG Technology Co., Ltd** 3/F, Building A, Yongshenghui Industrial Park, Chuangye Road, Shiyan Street, Bao'an District, Shenzhen
Product name:	**LED Strip**
Product model(s):	CWG-5050RGB-60D-5V, CWG-5050RGB-30D-12V, CWG-5050RGB-18D-12V, CWG-5050RGB-60D-24V, CWG-5050RGB-60D-12V, CWG-5050RGB-30D-5V, CWG-5050RGB-18D-5V, CWG-5050-60D-12V, CWG-5050-30D-12V, CWG-5050-60D-24V, CWG-HC5050RGB-60D-12V, CWG-HC5050RGB-30D-12V,CWG-HC5050RGB-60D-24V, CWG-HC5050-60D-12V, CWG-HC5050-30D-12V, CWG-HC5050-60D-24V, CWG-HC5050RGB-30D-5V, CWG-HC5050RGB-60D-5V, CWG-HC5050RGB-144D-5V, CWG-2835-60D-12V, CWG-2835-120D-12V, CWG-2835-60D-24V, CWG-2835-120D-24V, CWG-2835-60D-5V, CWG-2835-120D-5V
Product trademark:	创唯光

This verification confirms that the product meets the requirements of the following standard.
The conformity was demonstrated based on following standard(s) listed by European Commission as harmonized with Directive RoHS 2.0 Directive (EU) 2015/863 and (EU)2017/2102 amending Annex II to Directive 2011/65/EU

IEC 62321-1:2013	IEC 62321-3-1:2013
IEC 62321-4:2013/AMD1:2017	IEC 62321-5:2013
IEC 62321-6:2015	IEC 62321-7-1:2015
IEC 62321-7-2:2017	IEC 62321-8:2017
IEC 62321-2:2021	

The verification has been carried out in accordance with individual rules and conditions agreed with the applicant. Evaluation has been carried out in accordance with:

Test report(s) No.:	MK25070091P01-C01
Test conducted by:	TMC Testing Services (Shenzhen) Co., Ltd.
Verification issue date:	July 17, 2025

Notes:
This verification refers to the above mentioned product and its conformity in regards of above mentioned standard(s) was proven on test sample.
This verification does not imply meeting all essential requirements, assessment of the series-production or any other restricted Notified Bodies conformity assessment procedure appropriate for the product.
This verification holder shall use this verification in connection to verification of conformity and technical data relevant for the product the verification was issued.

TMC Testing Services (Shenzhen) Co., Ltd.
t:86-755-86642861 cert@tmc-lab.com www.tmc-lab.com
1st Floor, Block A1, Zone A, Xinshidai Gongrong Industrial Park, No. 2, Shihuan Road, Shiyan Street, Baoan District, Shenzhen, China

Bauart geprüft TMC Access to global market Product Safety approved

Lab
Vivian Jiang

TMC

Verification of compliance Verification of compliance Verification of compliance

Verification of Compliance

Verification No.:	MK25070091P01-S01
Name and address of Applicant:	**Shenzhen CWG Technology Co., Ltd** 3/F, Building A, Yongshenghui Industrial Park, Chuangye Road, Shiyan Street, Bao'an District, Shenzhen
Name and address of Manufacturer:	**Shenzhen CWG Technology Co., Ltd** 3/F, Building A, Yongshenghui Industrial Park, Chuangye Road, Shiyan Street, Bao'an District, Shenzhen
Product name:	**LED Strip**
Rated:	5Vdc
Product model(s):	CWG-5050RGB-60D-5V, Additional model reference attachment
Product trademark:	创唯光

This verification confirms that the product meets the requirements of the following standard.
The conformity was demonstrated based on following standard(s) listed by European Commission as harmonized with LVD Directive 2014/35/EU.

EN IEC 60598-2-1:2021;
EN IEC 60598-1:2021+ A11:2022;
EN IEC 62031:2020+A11:2021;
EN 62493:2015+A1:2022

The verification has been carried out in accordance with individual rules and conditions agreed with the applicant. Evaluation has been carried out in accordance with:

Test report(s) No.:	MK25070091P01-S01
Test conducted by:	TMC Testing Services (Shenzhen) Co., Ltd.
Verification issue date:	July 17, 2025

Notes:

This verification refers to the above mentioned product and its conformity in regards of above mentioned standard(s) was proven on test sample.

This verification does not imply meeting all essential requirements, assessment of the series-production or any other restricted Notified Bodies conformity assessment procedure appropriate for the product.

This verification holder shall use this verification in connection to Verification of Compliance and technical data relevant for the product the verification was issued.

TMC Testing Services (Shenzhen) Co., Ltd.
t:86-755-86642861 cert@tmc-lab.com www.tmc-lab.com
1/F. of Building A1, 5/F. of Building B1, & 1/F. of Building A3, Xinshidai Gongrong Industrial Park, No.2, Shihuan Road, Shilong Community, Shiyan Subdistrict, Bao'an District, Shenzhen, Guangdong, China

Dodd Tang

Lab Dire
Dodd Tang

Bauart geprüft TMC Product Safety Type approved

CE

Verification of compliance Verification of compliance Verification of compliance

TMC
Access to global market

Product model(s):	CWG-5050RGB-60D-5V, CWG-5050RGB-30D-12V, CWG-5050RGB-18D-12V, CWG-5050RGB-60D-24V, CWG-5050RGB-60D-12V, CWG-5050RGB-30D-5V, CWG-5050RGB-18D-5V, CWG-5050-60D-12V, CWG-5050-30D-12V, CWG-5050-60D-24V, CWG-HC5050RGB-60D-12V, CWG-HC5050RGB-30D-12V, CWG-HC5050RGB-60D-24V, CWG-HC5050-60D-12V, CWG-HC5050-30D-12V, CWG-HC5050-60D-24V, CWG-HC5050RGB-30D-5V, CWG-HC5050RGB-60D-5V, CWG-HC5050RGB-144D-5V, CWG-2835-60D-12V, CWG-2835-120D-12V, CWG-2835-60D-24V, CWG-2835-120D-24V, CWG-2835-60D-5V, CWG-2835-120D-5V
Note:	This attachment only valided with Verification No.: MK25070091P01-S01

Verification of compliance Verification of compliance Verification of compliance

Verification of Compliance

Verification No.:	MK25070091P01-E01
Name and address of Applicant:	**Shenzhen CWG Technology Co., Ltd** 3/F, Building A, Yongshenghui Industrial Park, Chuangye Road, Shiyan Street, Bao'an District, Shenzhen
Name and address of Manufacturer	**Shenzhen CWG Technology Co., Ltd** 3/F, Building A, Yongshenghui Industrial Park, Chuangye Road, Shiyan Street, Bao'an District, Shenzhen
Product name:	**LED Strip**
Rated:	5V ⎓
Product model(s):	CWG-5050RGB-60D-5V, CWG-5050RGB-30D-12V, CWG-5050RGB-18D-12V, CWG-5050RGB-60D-24V, CWG-5050RGB-60D-12V, CWG-5050RGB-30D-5V, CWG-5050RGB-18D-5V, CWG-5050-60D-12V, CWG-5050-30D-12V, CWG-5050-60D-24V, CWG-HC5050RGB-60D-12V, CWG-HC5050RGB-30D-12V,CWG-HC5050RGB-60D-24V, CWG-HC5050-60D-12V, CWG-HC5050-30D-12V, CWG-HC5050-60D-24V, CWG-HC5050RGB-30D-5V, CWG-HC5050RGB-60D-5V, CWG-HC5050RGB-144D-5V, CWG-2835-60D-12V, CWG-2835-120D-12V, CWG-2835-60D-24V, CWG-2835-120D-24V, CWG-2835-60D-5V, CWG-2835-120D-5V
Product trademark:	创唯光

This verification confirms that the product meets the requirements of the following standard.
The conformity was demonstrated based on following standard(s) listed by European Commission as harmonized with EMC Directive 2014/30/EU.

EN IEC 55015:2019+A11:2020
EN IEC 61547:2023

The verification has been carried out in accordance with individual rules and conditions agreed with the applicant. Evaluation has been carried out in accordance with:

Test report(s) No.:	MK25070091P01-E01
Test conducted by:	TMC Testing Services (Shenzhen) Co., Ltd.
Verification issue date:	July 17, 2025

Notes:
This verification refers to the above mentioned product and its conformity in regards of above mentioned standard(s) was proven on test sample.
This verification does not imply meeting all essential requirements, assessment of the series-production or any other restricted Notified Bodies conformity assessment procedure appropriate for the product.
This verification holder shall use this verification in connection to verification of conformity and technical data relevant for the product the verification was issued.

TMC Testing Services (Shenzhen) Co., Ltd.
t:86-755-86642861 cert@tmc-lab.com www.tmc-lab.com
1st Floor, Block A1, Zone A, Xinshidai Gongrong Industrial Park, No. 2, Shihuan Road, Shiyan Street, Baoan District, Shenzhen, China

Bauart geprüft TMC Product Safety

Lab Manager
Viviart Jiang

Importeur	KONO STEEL GMBH
Adresse	PFARRER-BRANTZEN-STR.48 55122 MAINZ
E-mail	office@kono-steel.de
Manufacture	JIAXING HI FINE INTERNATIONAL ENTERPRISE CO.,LTD.
Address	NO.233 CHANGAN ROAD(N),WUYUAN STREET HAIYAN,JIAXING,ZHEJIANG,CHINA
E-mail	happylinda@hi-fine.com
EC REP	KONO STEEL GMBH PFARRER-BRANTZEN-STR.48 55122 MAINZ office@kono-steel.de