OBERON



1/16



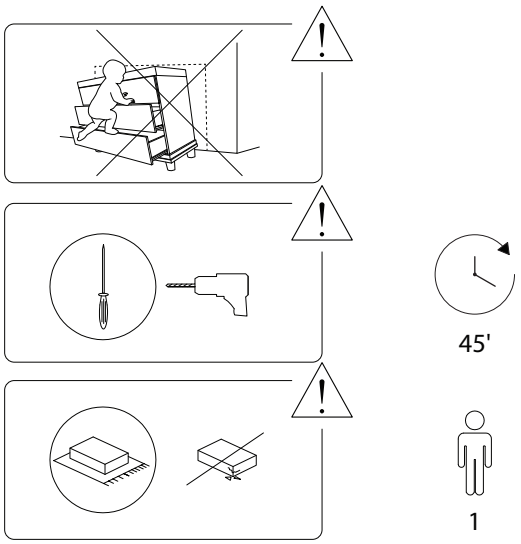

2/16

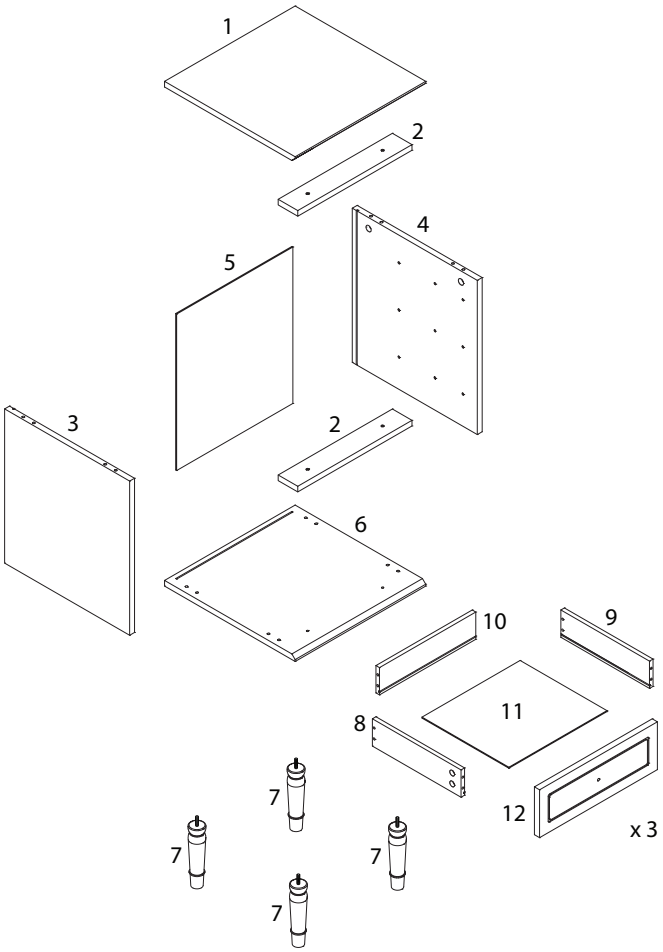

3/16

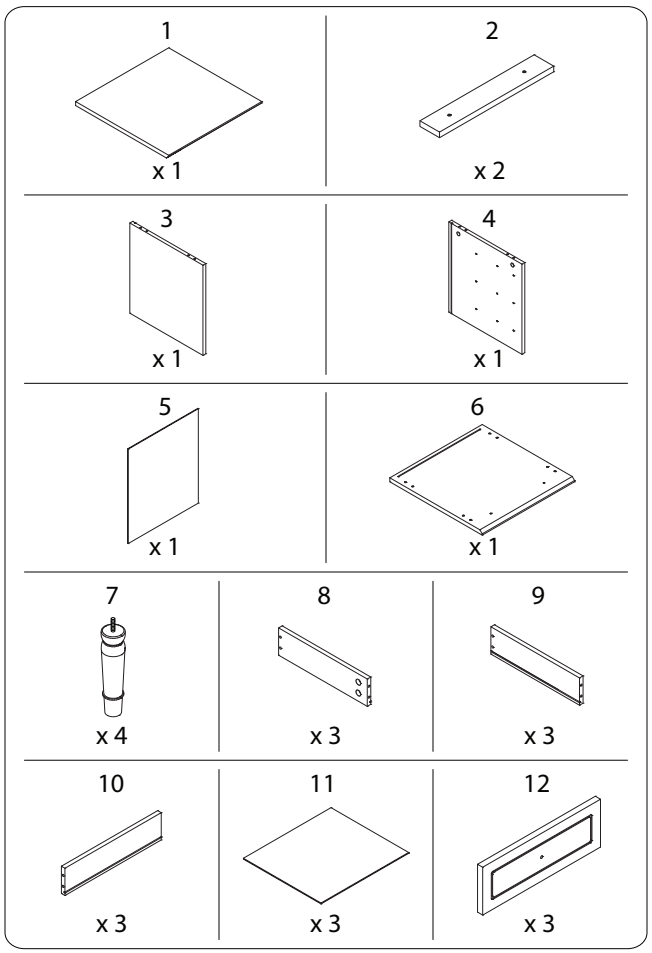

4/16

680/OBERON/021126/

A	B	C	D
			
x 16	x 16	x 8	x 36
E	**F**	**G**	**H**
			
x 16	x 4	x 3	x 3
I	**J**	**K1**	**K2**
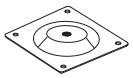			
x 4	x 16	x 6	x 6
L1	**L2**	**L3**	**L4**
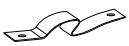			
x 1	x 1	x 1	x 2
L5	**M**	**N**	**O**
		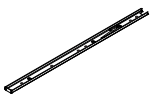	
x 1	x 6	x 6	x 4

5/16

680/OBERON/021126/

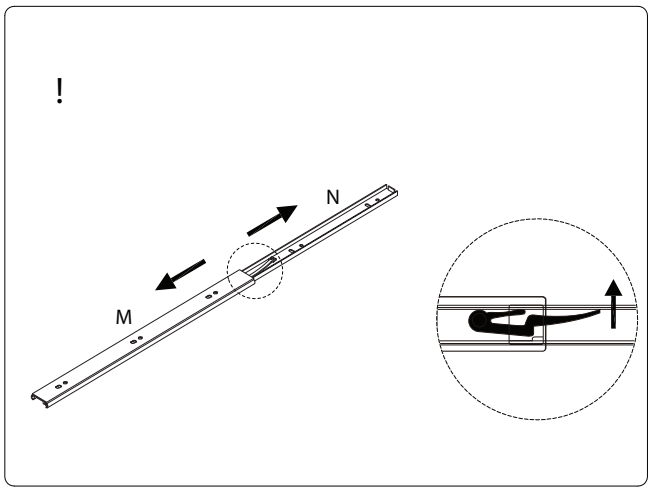

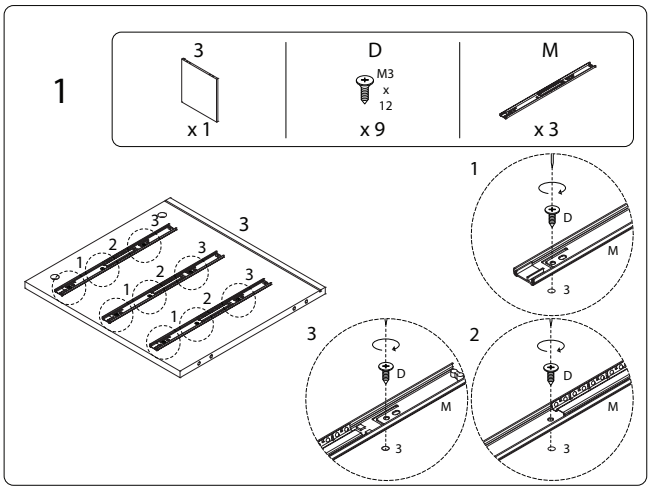

6/16

680/OBERON/021126/

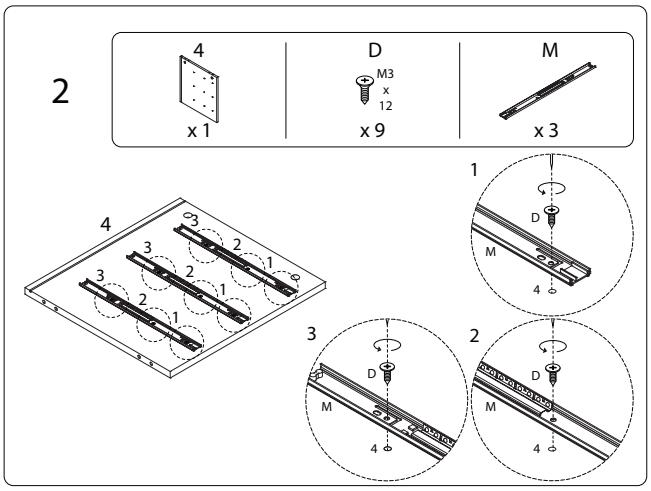

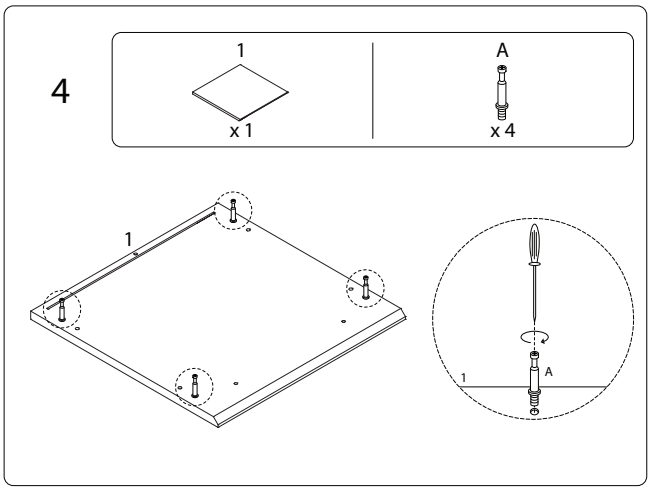

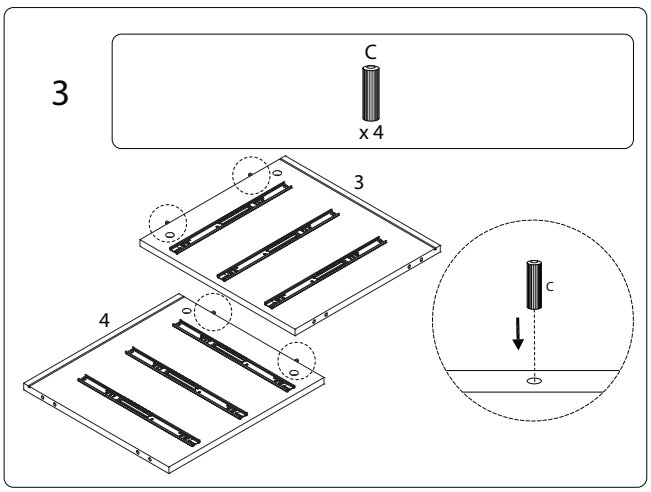

7/16

680/OBERON/021126/

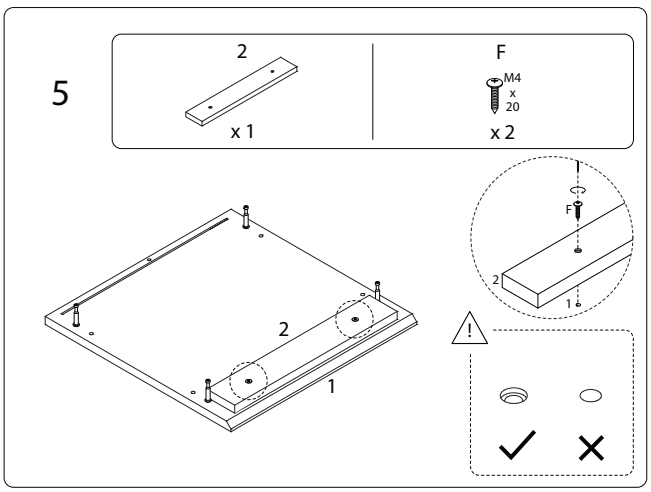

8/16

680/OBERON/021126/

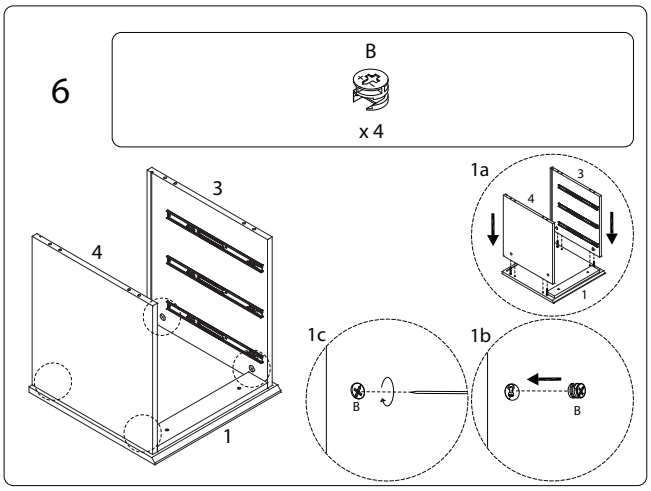
6
B
x 4
3
4
1
1a
3
4
1
1c
B
1b
B

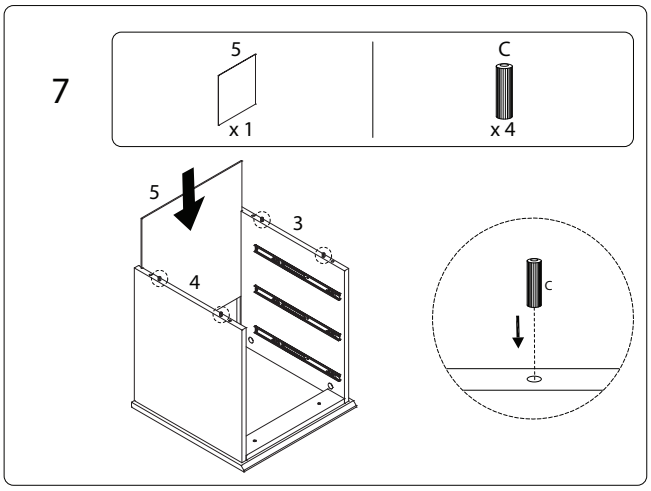
7
5
x 1
C
x 4
5
3
4
C

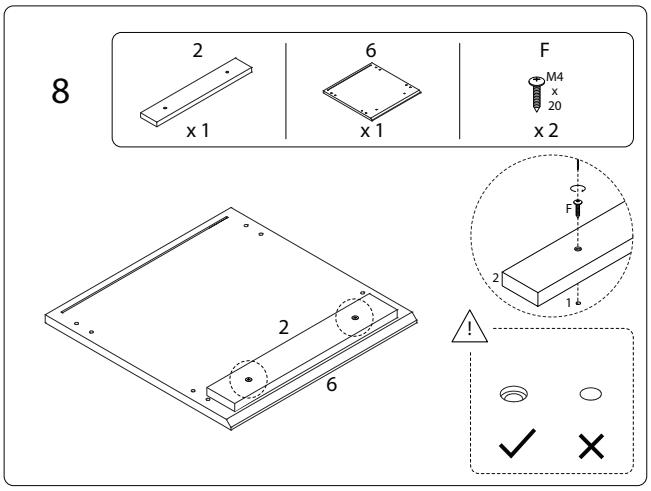
8
2
x 1
6
x 1
F
M4
x
20
x 2
2
6
F
2
1

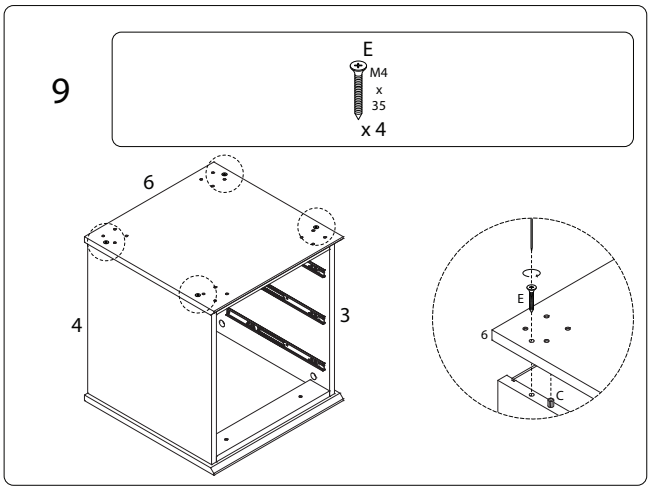
9
E
M4
x
35
x 4
6
4
3
E
6
C

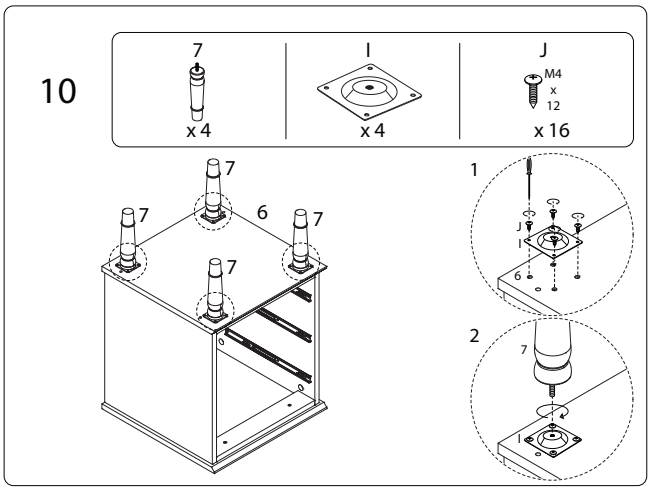
10
7
x 4
I
x 4
J
M4
x
12
x 16
7
7
6
7
7
1
J
I
6
2
7
I

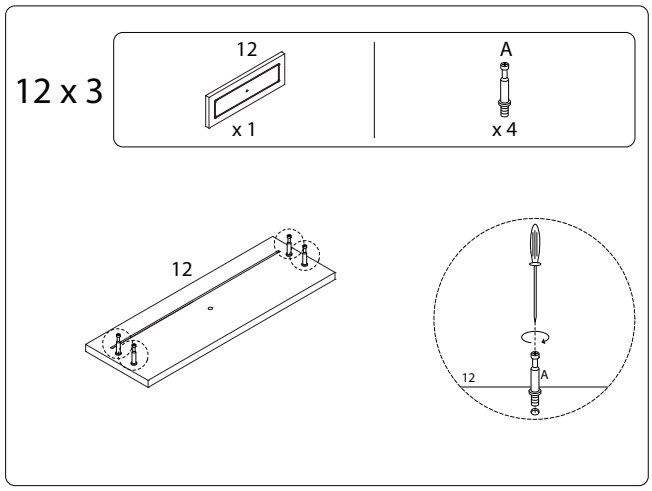
12 x 3
12
x 1
A
x 4
12
12
A

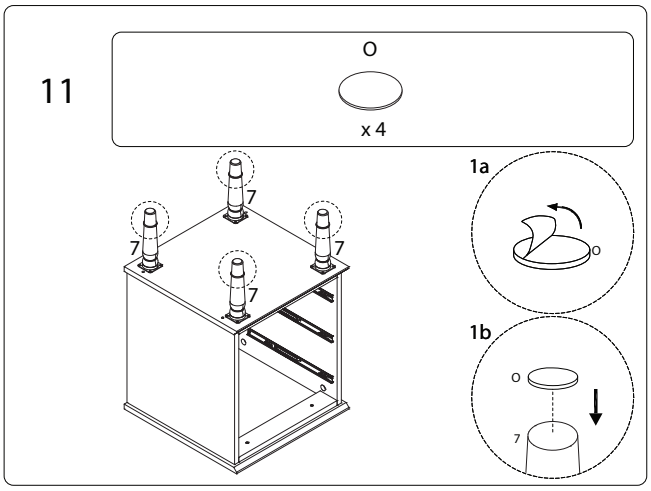
11
O
x 4
7
7
7
7
1a
O
1b
O
7

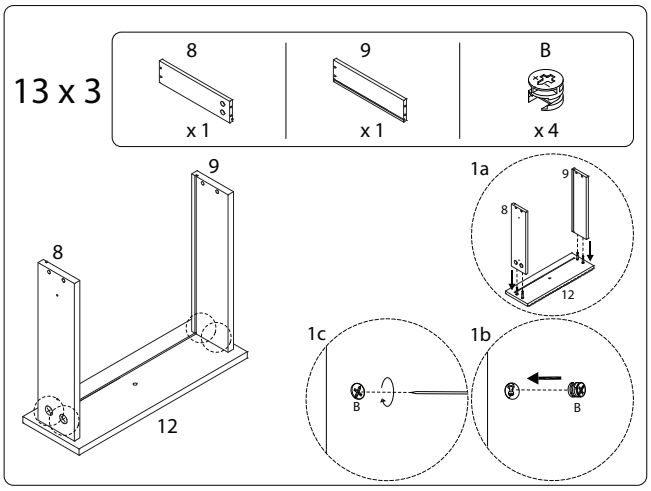
13 x 3
8
x 1
9
x 1
B
x 4
9
8
12
1a
9
8
12
1c
B
1b
B

14 x 3

11 x 1

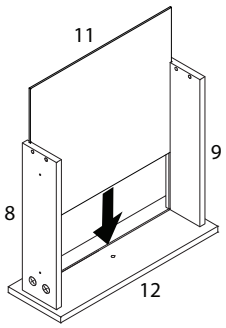

15 x 3

10 x 1

E M4 x 35 x 4

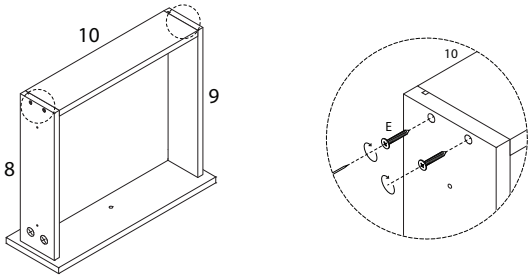

16 x 3

D M3 x 12 x 4

N x 2

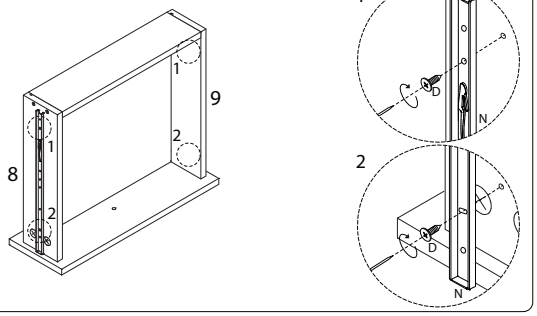

17 x 3

G x 1

H M4 x 16 x 1

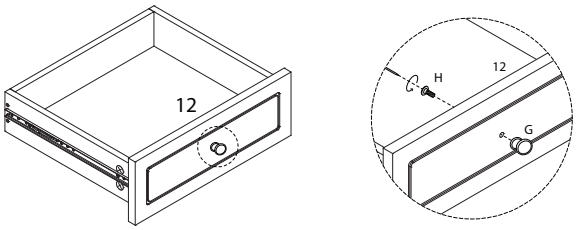

18

K1 x 6

K2 M3 x 16 x 6

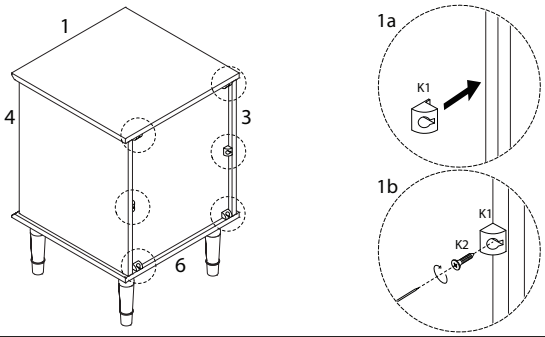

19

L1 x 1

L2 M4 x 12 x 1

L3 x 1

L4 x 2

L5 M4 x 35 x 1

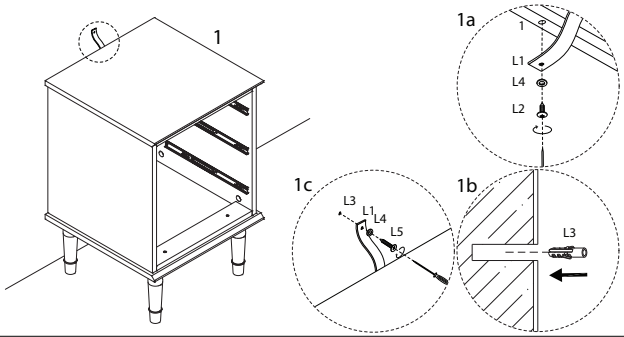

20

D M3 x 12 x 6

