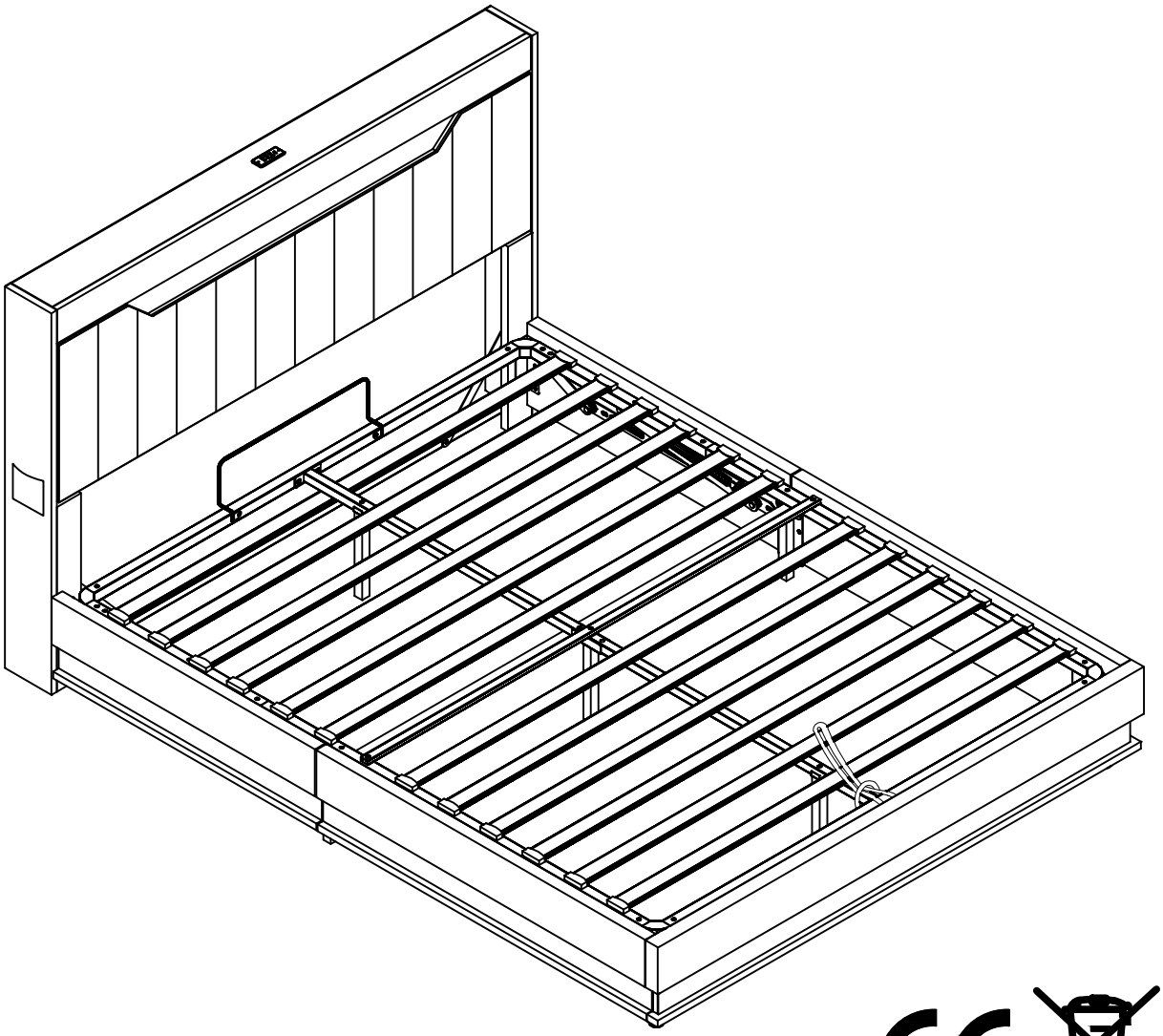
Montageanleitung | Instructions de montage
Assembly Instructions| Instrucciones de montaje

SKU:N616P269668/N616P269669/N616P269670



GB This set comes in 3 boxes. If you do not receive a full set of 3 boxes, please contact our customer service.

DE Dieses Set wird in 3 Schachteln geliefert. Wenn Sie nicht ein komplettes Set von 3 Boxen erhalten, kontaktieren Sie bitte unseren Kundenservice.

FR Ce set est livré en 3 boîtes. Si vous ne recevez pas un jeu complet de 3 boîtes, veuillez contacter notre service clientèle.

English

IMPORTANT FOR GAS LIFT BEDS&MAINTAINCE

- Please place the mattress on top of the bed frame.
- Please do not pull on the strap handles.
- Please press heavily to release the compressed gas.
- Periodically check all screw & fixings to ensure they are secure.
- When moving your product, carefully lift into place.
- Wipe clean with a slightly damp cloth- please do not use abrasive chemicals or bleach.
- Do NOT allow children to operate the lift mechanism.
- Do NOT allow children near the lift base when operating the mechanism.
- Do NOT stand inside the bed or the internal storage base.
- Do NOT overload the internal storage base.
- DO NOT jump on the product or any of its parts.

Deutsch

WICHTIG FÜR GASLIFT-BETTEN&WARTUNG

- Bitte legen Sie die Matratze oben auf den Bettrahmen.
- Bitte ziehen Sie nicht an den Gurtgriffen.
- Bitte drücken Sie kräftig, um das komprimierte Gas freizusetzen.
- Überprüfen Sie regelmäßig alle Schrauben und Befestigungen, um sicherzustellen, dass sie sicher sind.
- Wenn Sie Ihr Produkt bewegen, heben Sie es vorsichtig an seinen Platz.
- Mit einem leicht feuchten Tuch abwischen - bitte keine scheuernden Chemikalien oder Bleichmittel verwenden.
- Erlauben Sie Kindern NICHT, den Hebemechanismus zu bedienen.
- Lassen Sie Kinder NICHT in die Nähe des Liftsockels, wenn Sie den Mechanismus bedienen.
- Stellen Sie sich NICHT in das Bett oder in die Innenablage.
- Überlasten Sie den internen Liftsockel NICHT.
- Springen Sie NICHT auf das Produkt oder eines seiner Teile.

Français

IMPORTANT POUR LES LITS À RELEVAGE DE GAZ&MAINTENANCE

- Veuillez placer le matelas sur le dessus du cadre de lit.
- Ne tirez pas sur les poignées de la sangle.
- Appuyez fortement pour libérer le gaz comprimé.
- Vérifiez régulièrement que toutes les vis et fixations sont bien en place.
- Lorsque vous déplacez votre produit, soulevez-le avec précaution pour le mettre en place.
- Nettoyez avec un chiffon légèrement humide - n'utilisez pas de produits chimiques abrasifs ou d'eau de Javel.
- Ne laissez pas les enfants utiliser le mécanisme de levage.
- Ne laissez pas les enfants s'approcher de la base de levage lorsqu'ils actionnent le mécanisme.
- Ne vous tenez PAS à l'intérieur du lit ou de la base de stockage interne.
- Ne surchargez pas la base de stockage interne.
- Ne pas sauter sur le produit ou l'une de ses parties.

Italiano

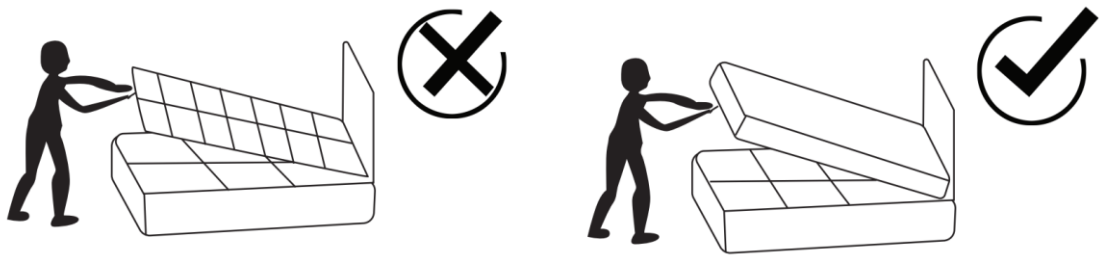
IMPORTANTE PER I LETTI CON SOLLEVAMENTO A GAS E LA MANUTENZIONE

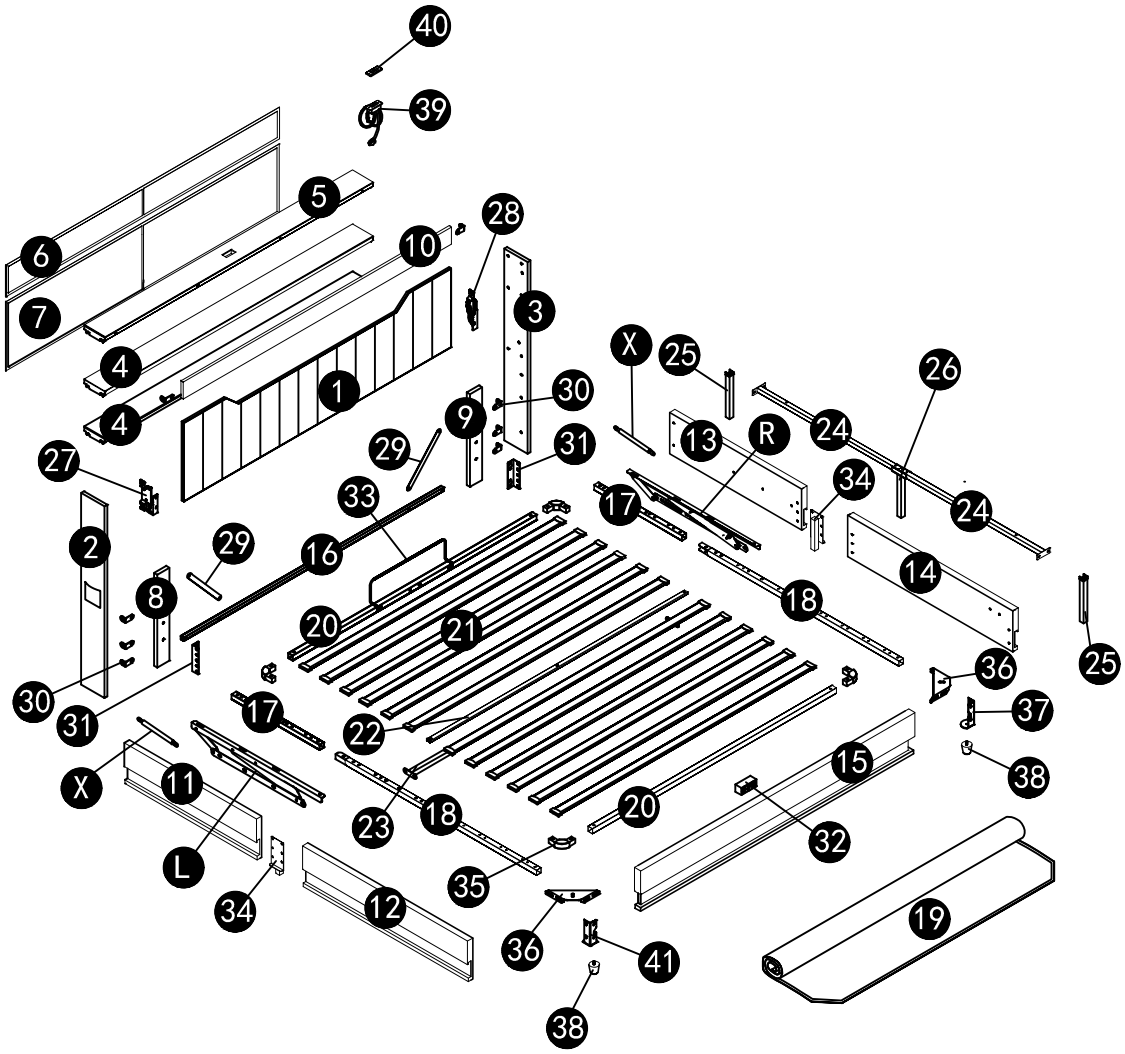
- Posizionare il materasso sopra la struttura del letto.
- Non tirare le maniglie della cinghia.
- Premere con forza per rilasciare il gas compresso.
- Controllare periodicamente tutte le viti e i fissaggi per assicurarsi che siano saldi.
- Quando si sposta il prodotto, sollevarlo con cautela.
- Pulire con un panno leggermente umido, senza usare prodotti chimici abrasivi o candeggina.
- NON permettere ai bambini di azionare il meccanismo di sollevamento.
- NON permettere ai bambini di avvicinarsi alla base di sollevamento quando si aziona il meccanismo.
- NON sostare all'interno del letto o della base di contenimento interna.
- NON sovraccaricare la base di contenimento interna.
- NON saltare sul prodotto o sulle sue parti.

Español

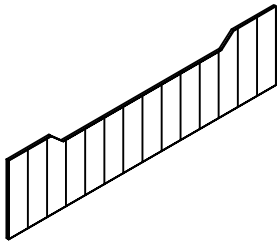
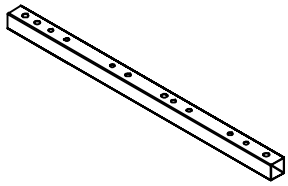
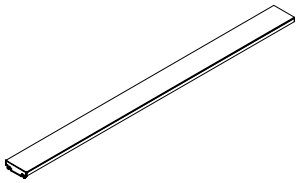
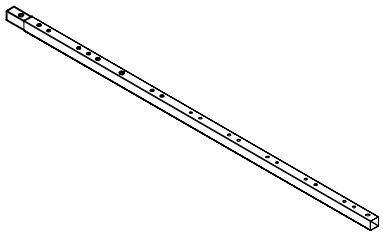
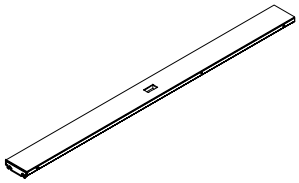
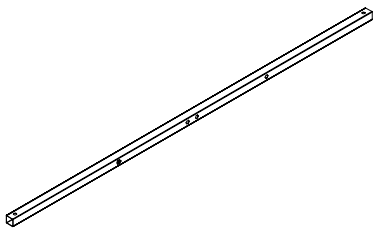
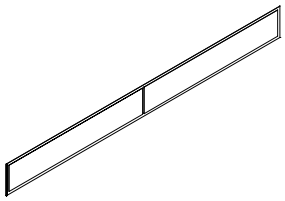
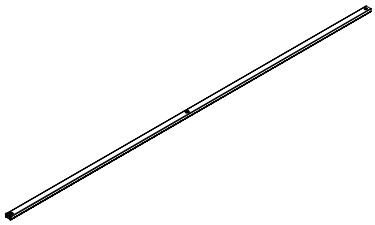
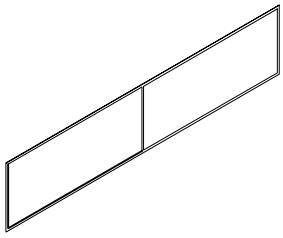
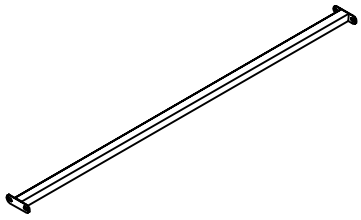
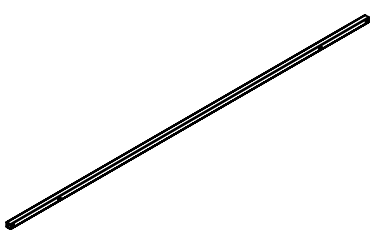
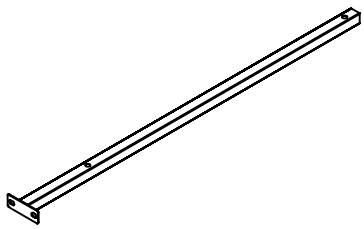
IMPORTANTE PARA LAS CAMAS ELEVADORAS DE GAS&MANTENIMIENTO

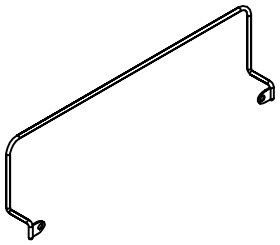
- Coloque el colchón sobre el somier.
- No tire de las asas de la correa.
- Presione con fuerza para liberar el gas comprimido.
- Compruebe periódicamente que todos los tornillos y fijaciones estén bien sujetos.
- Al mover el producto, levántelo con cuidado para colocarlo en su sitio.
- Limpie con un paño ligeramente humedecido; no utilice productos químicos abrasivos ni lejía.
- NO permita que los niños accionen el mecanismo de elevación.
- NO permita que los niños se acerquen a la base elevadora cuando accionen el mecanismo.
- NO se ponga de pie dentro de la cama o de la base de almacenamiento interna.
- NO sobrecargue el somier.
- NO salte sobre el producto ni sobre ninguna de sus piezas.

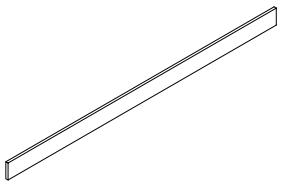
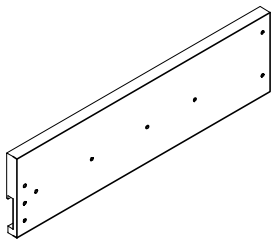
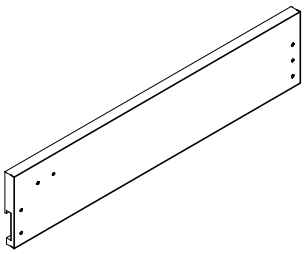
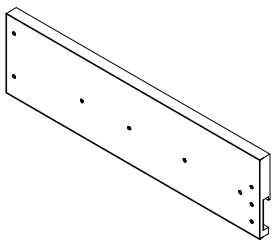
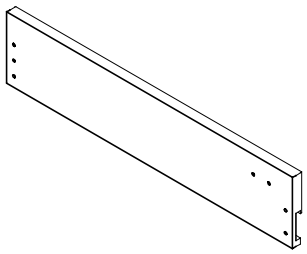
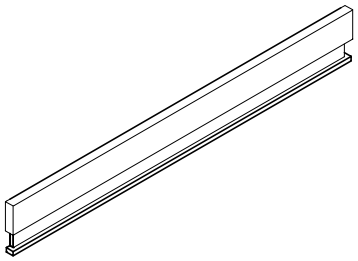


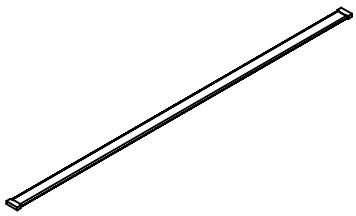

40
39
5
6
7
28
10
3
4
4
1
X
25
26
30
9
13
R
24
29
31
27
34
33
17
24
2
29
16
14
8
18
20
21
25
36
30
31
17
22
37
X
11
15
38
18
20
23
32
L
35
34
12
36
41
19
38

N616P269668

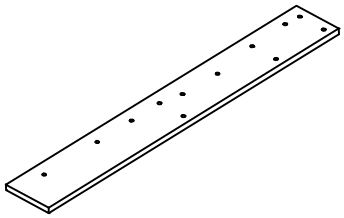
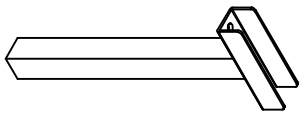
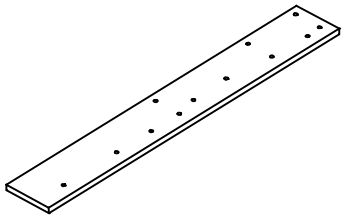
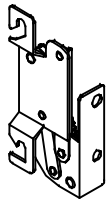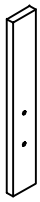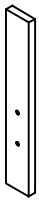
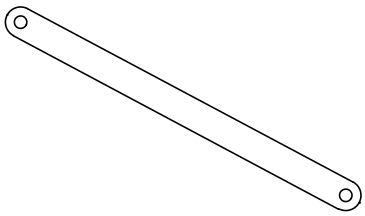
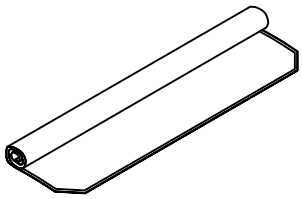
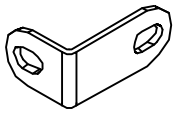
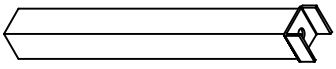
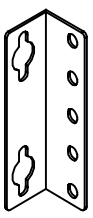
1		X1	17		X2
4		X2	18		X2
5		X1	20		X2
6		X1	22		X1
7		X1	23		X1
16		X1	24		X2

33		X1			

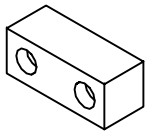
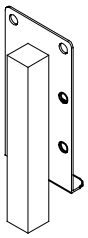
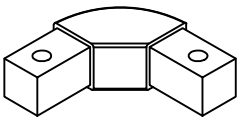
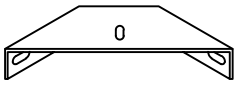
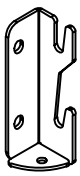
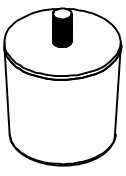
10		X1
11		X1
12		X1
13		X1
14		X1
15		X1

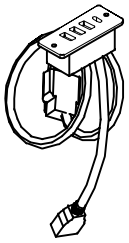
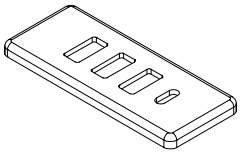
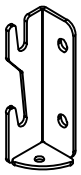
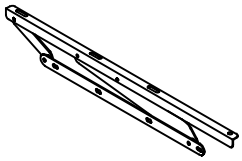
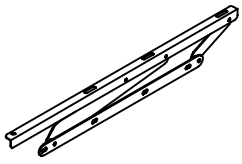
21		X12

N616P269670

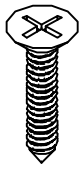
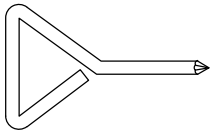
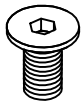
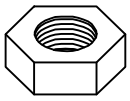
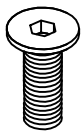
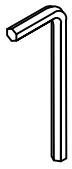
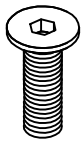
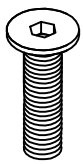
2		X1	26		X1
3		X1	27		X1
8		X1	28		X1
9		X1	29		X2
19		X1	30		X8
25		X2	31		X2

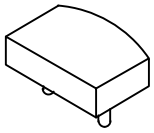
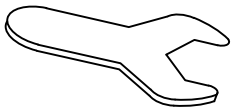
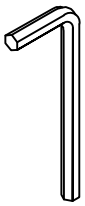
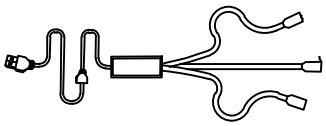
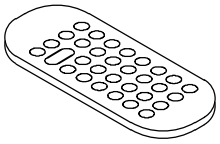
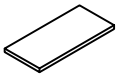
N616P269670

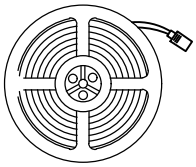
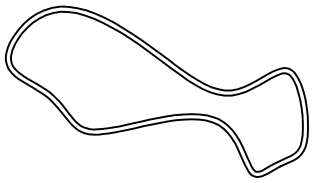
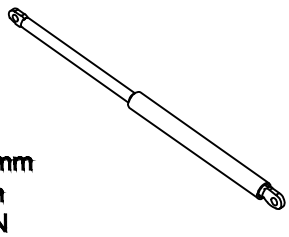
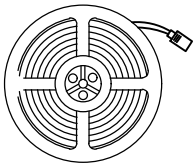
32		X1
34		X2
35		X4
36		X2
37		X1
38		X2

39		X1
40		X1
41		X1
L		X1
R		X1

N616P269670

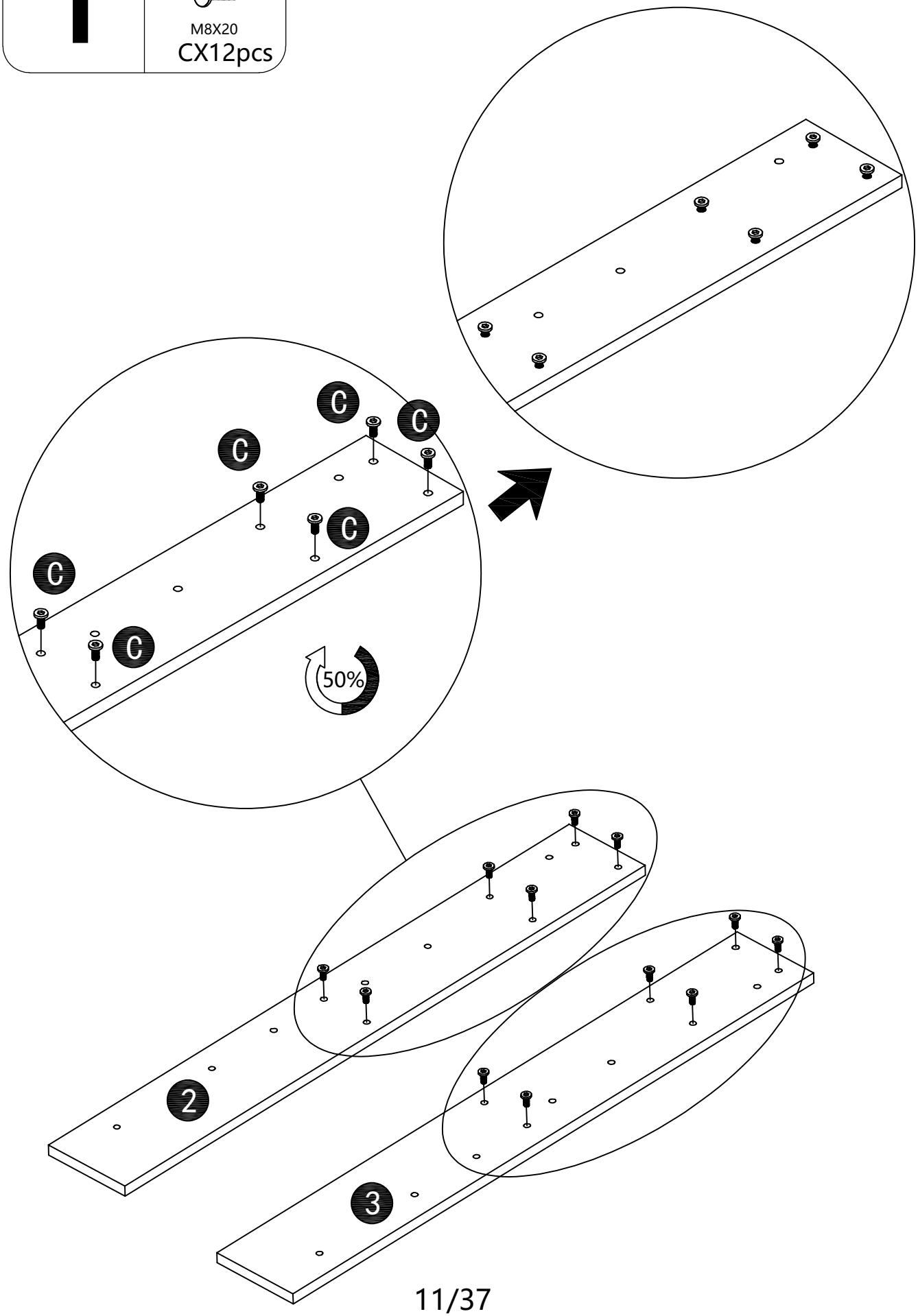
A	 M8*12	X8+1	H	 M4*12	X2+1
B	 M8*15	X42+2	I		X1
C	 M8*20	X48+2	J	 M8	X12+1
D	 M8*35	X4+1	L	 M6	X1
E	 M8*40	X4+1	N	 M6*20	X4+1
F	 M8*50	X9+1	M	 M6*15	X2+1

P		X24
Q		X1
R	 M8	X1
S	 **Power cord**	X1
T	 **Remote control**	X1
U		X4

V	 **Long light strip**	X2
W		X1
X	 400mm 9mm 750N	X2
Z	 **Short light strip**	X1

1

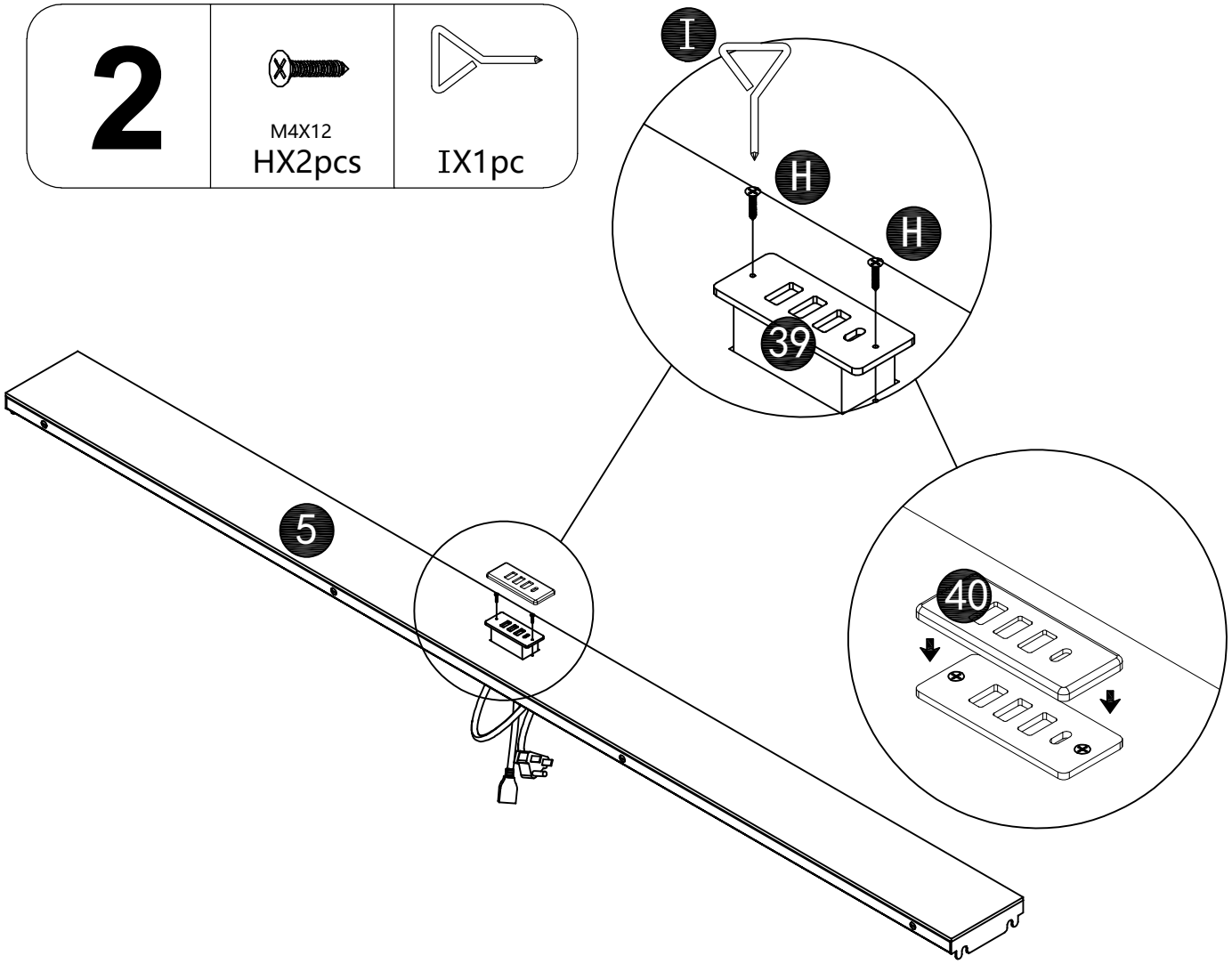
M8X20
CX12pcs



2

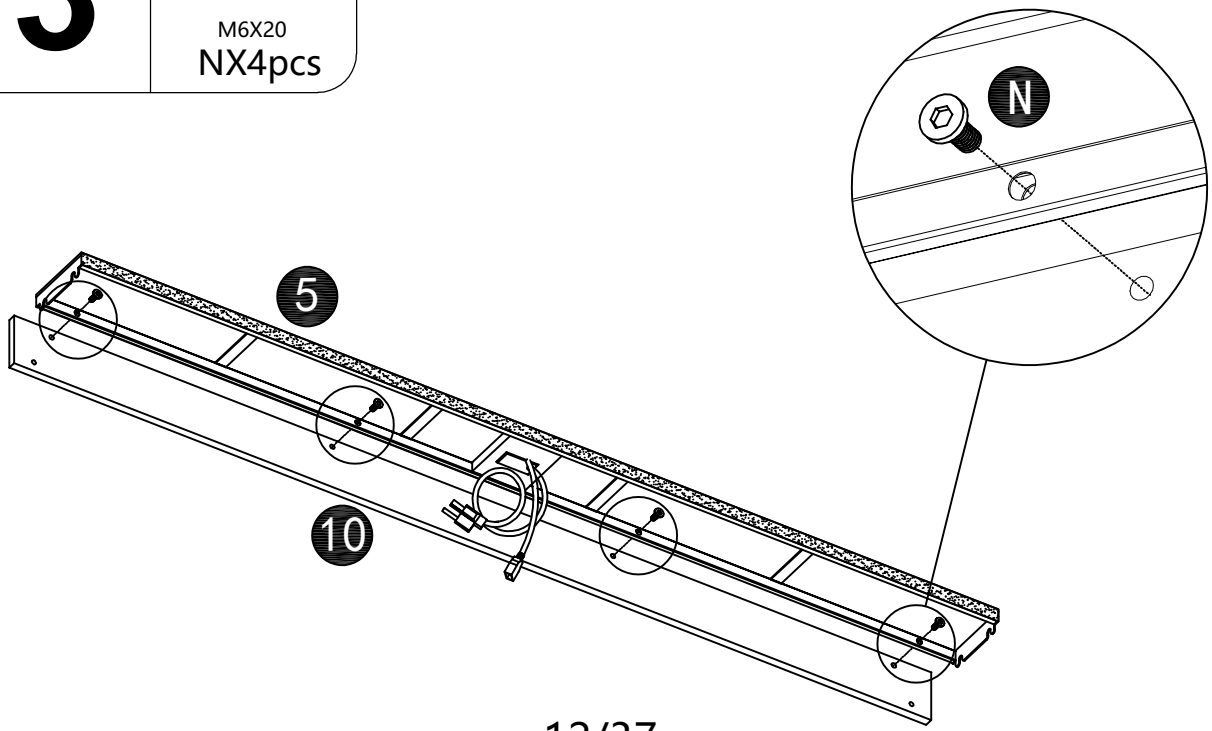
M4X12
HX2pcs

IX1pc

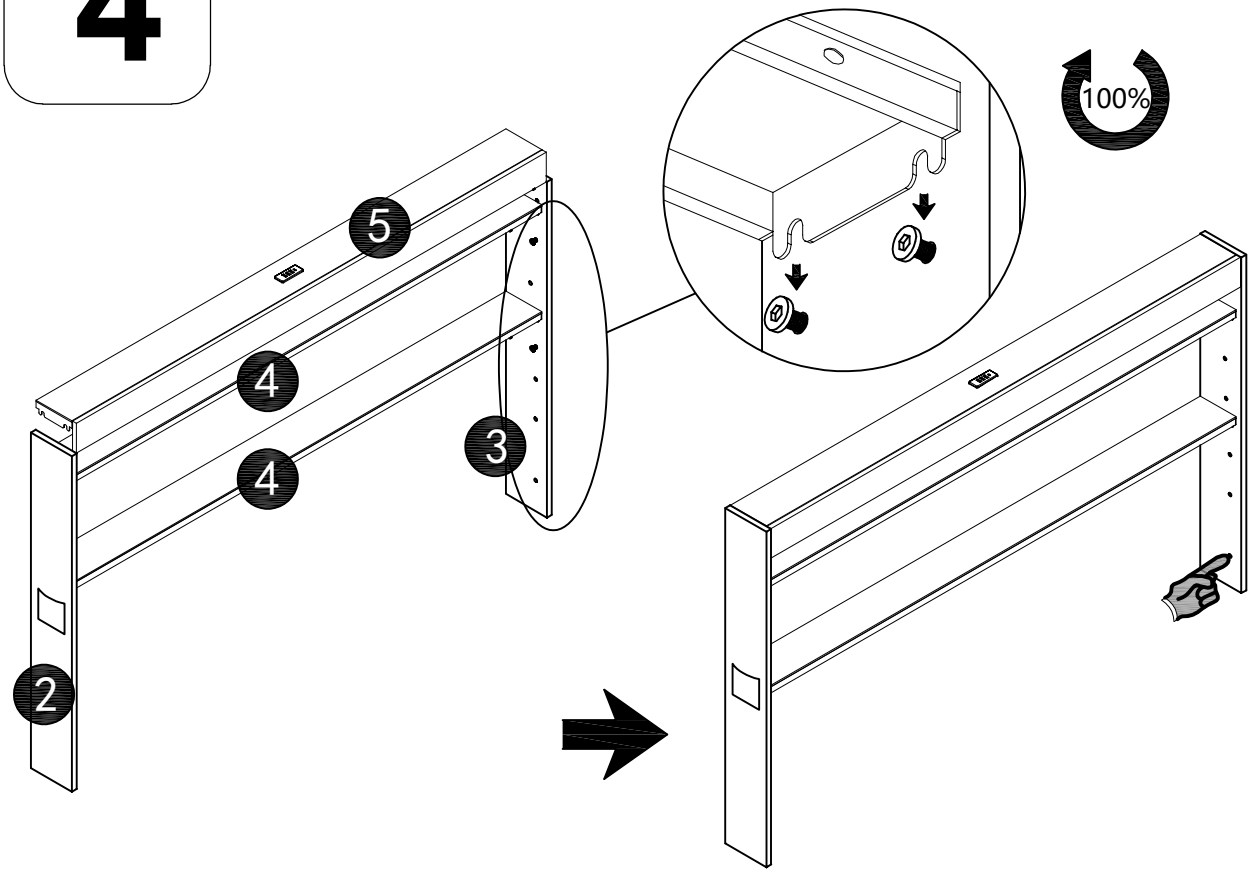


3

M6X20
NX4pcs

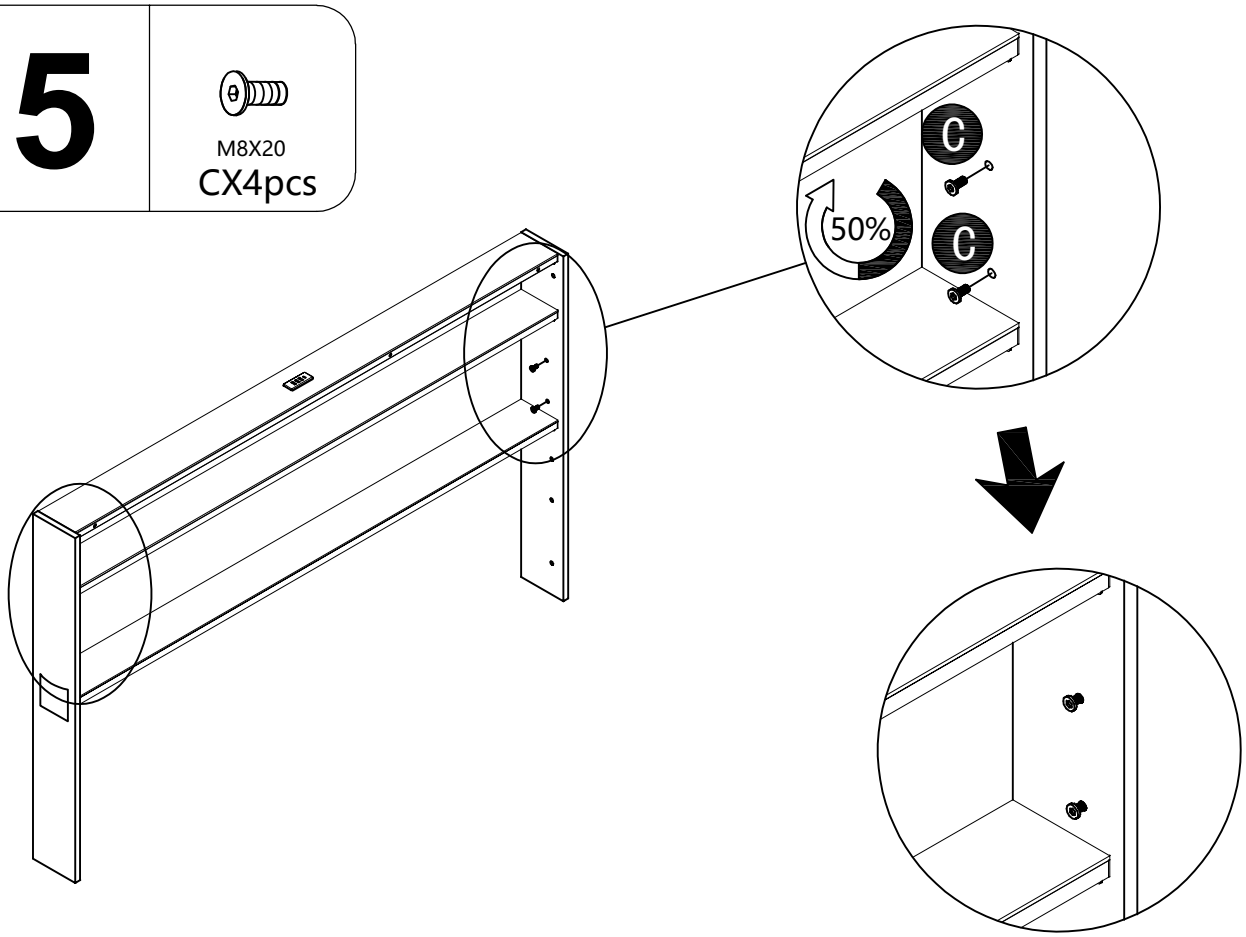


4



5

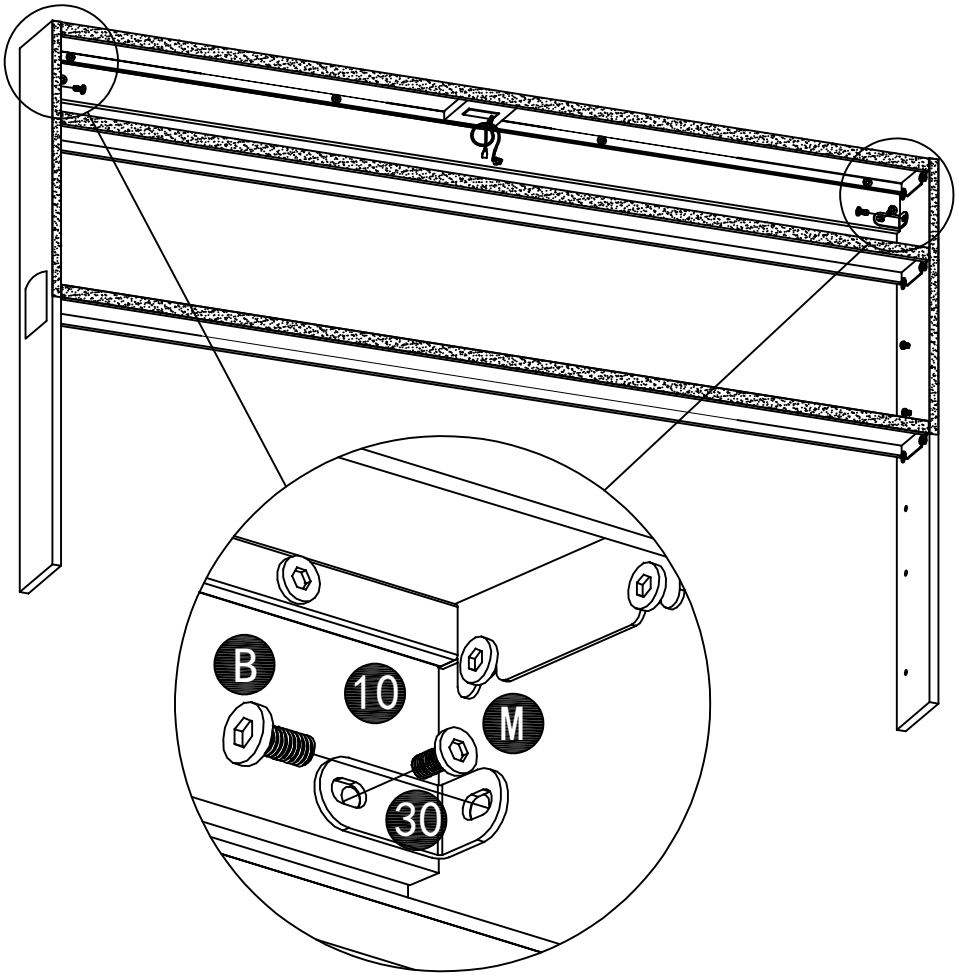
M8X20
CX4pcs



6

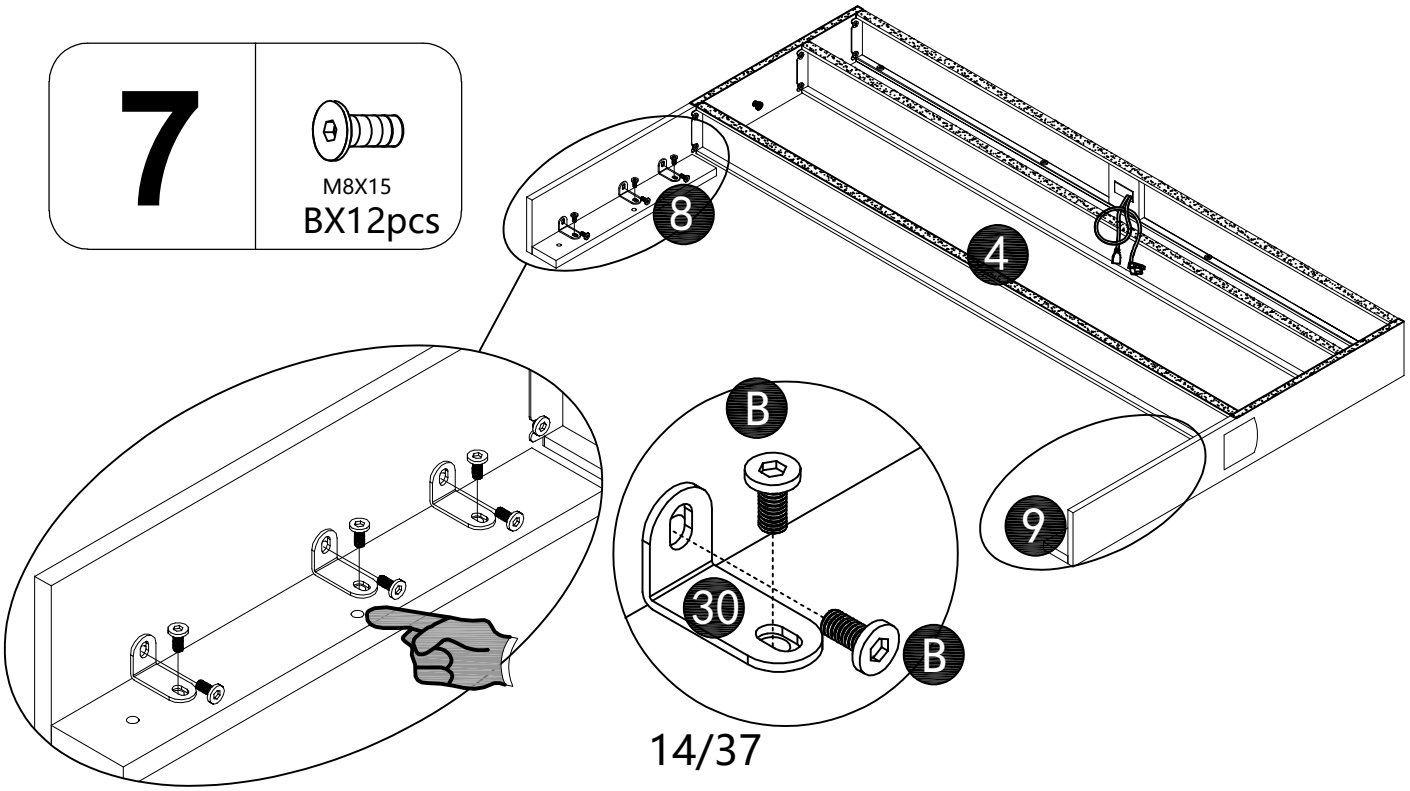
M8X15
BX2pcs

M6X15
MX2pcs

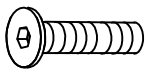


7

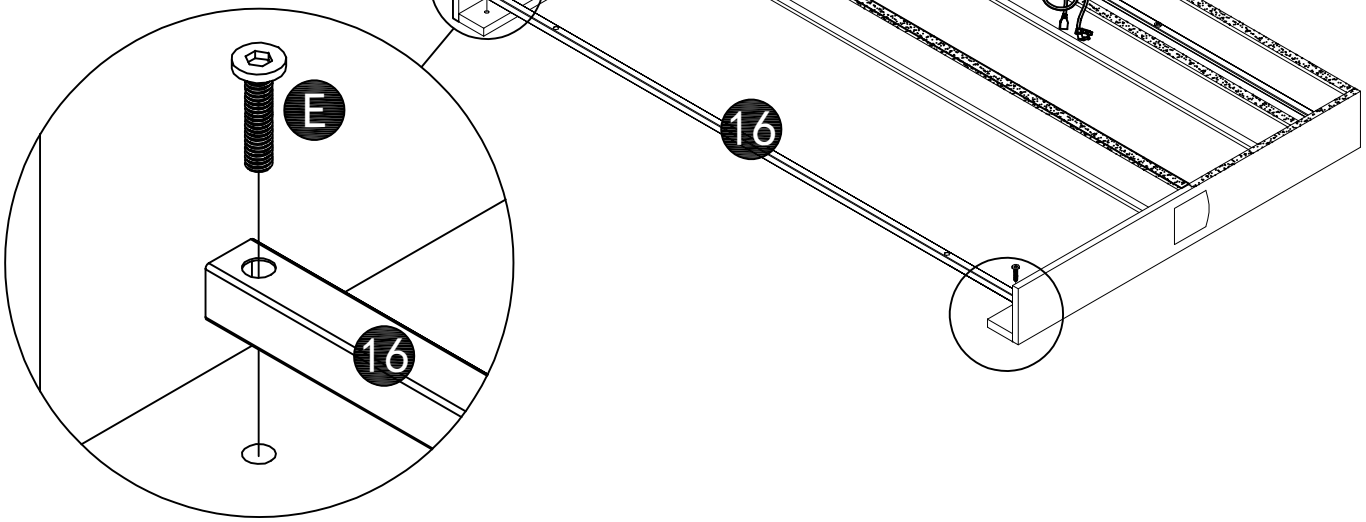
M8X15
BX12pcs



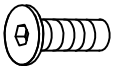
8



M8X40
EX2pcs



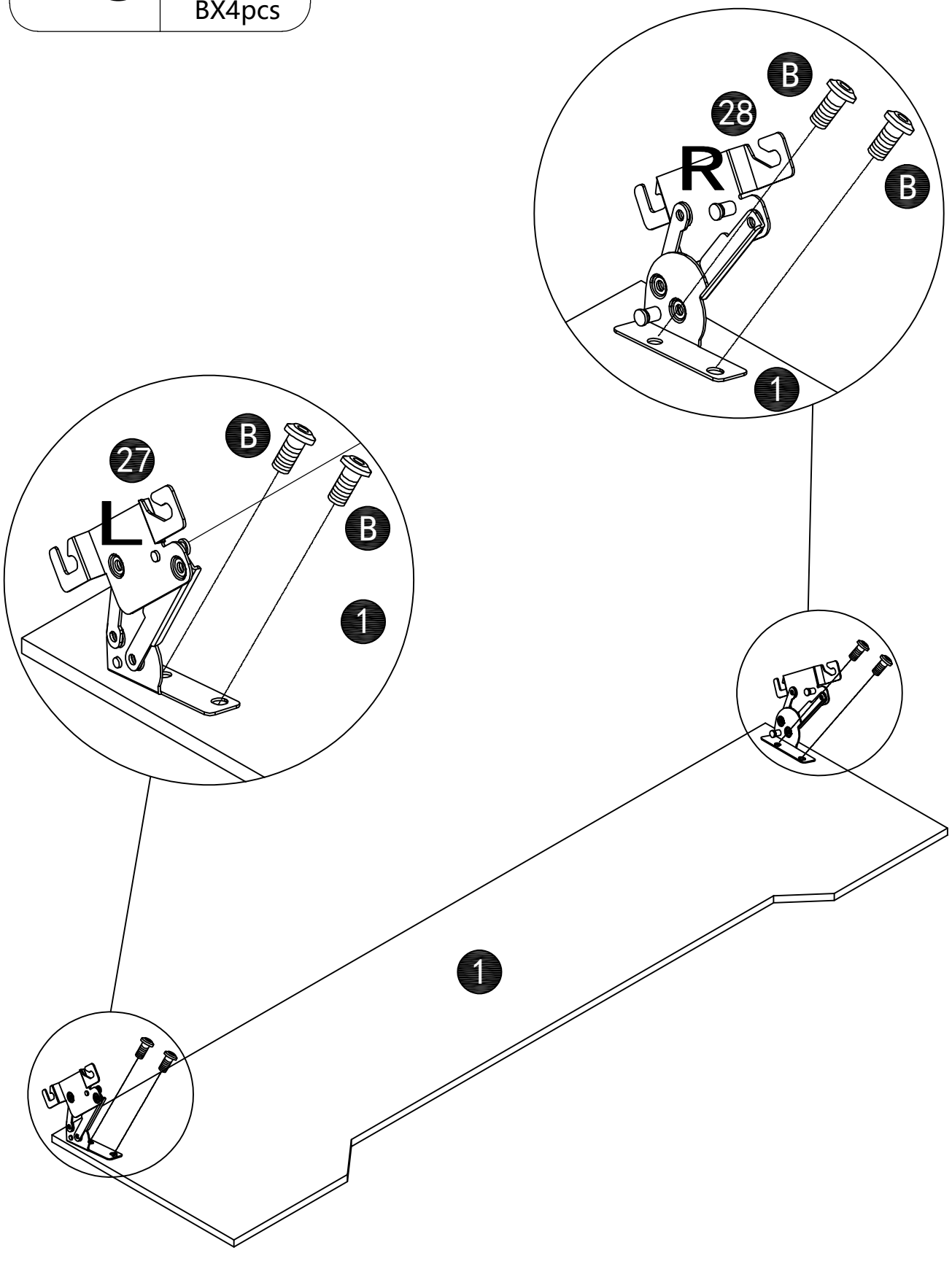
9



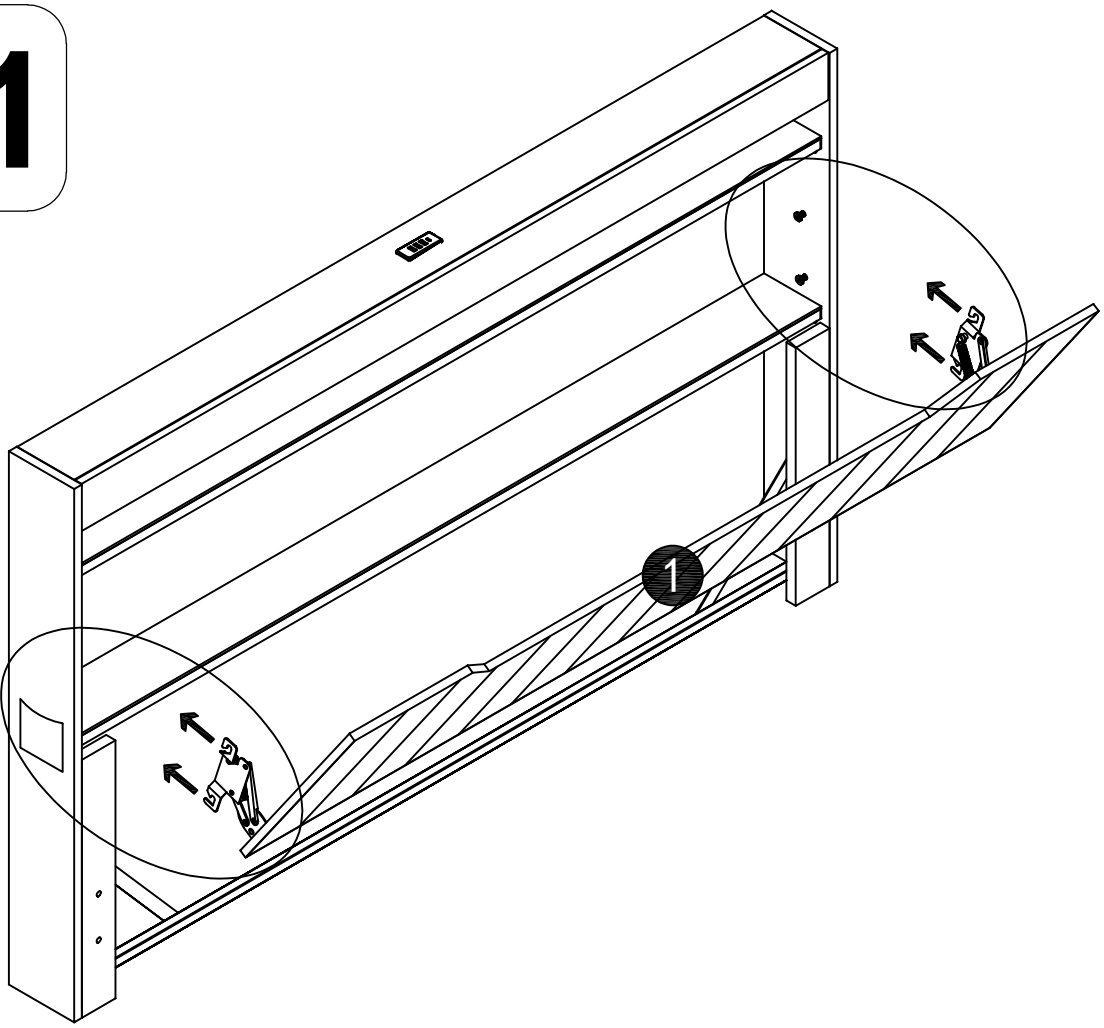
M8X20
CX4pcs

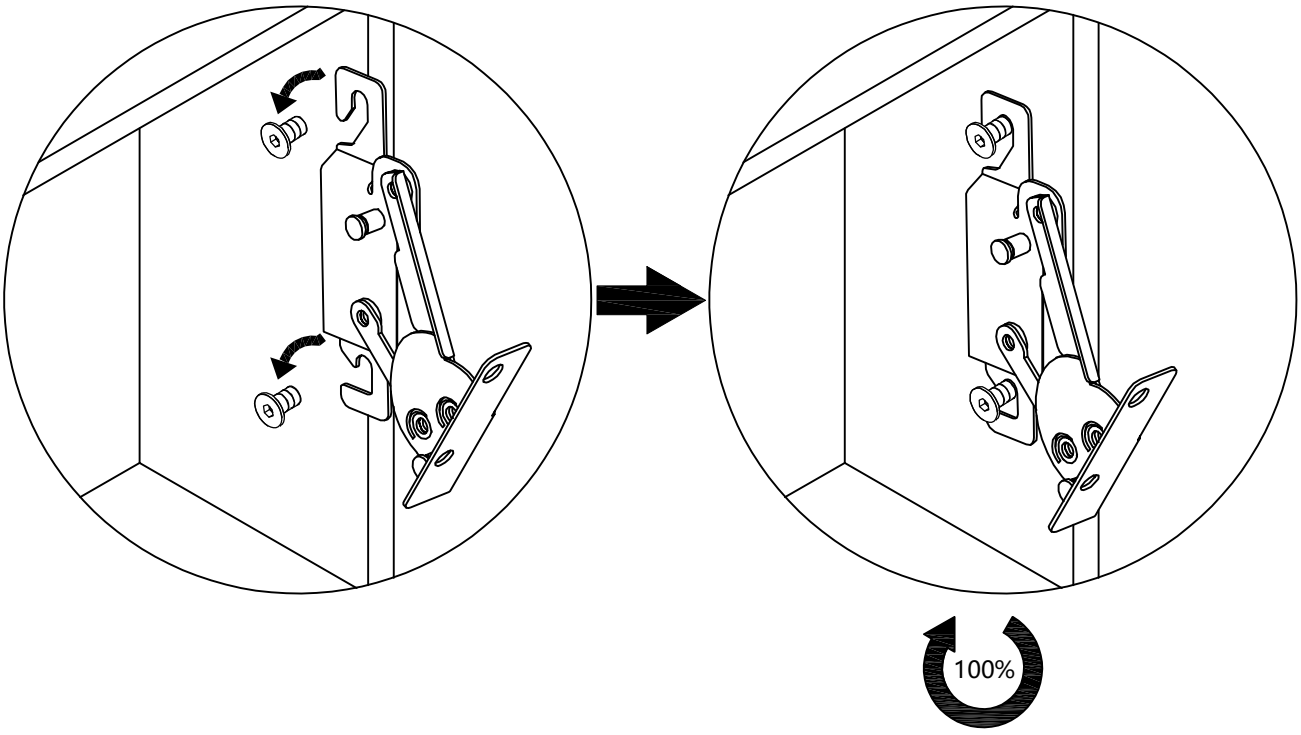
10

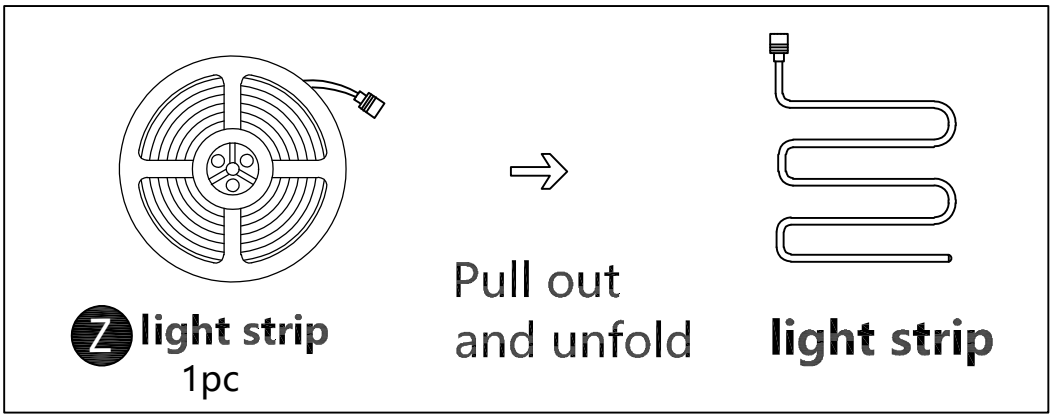
M8X15
BX4pcs

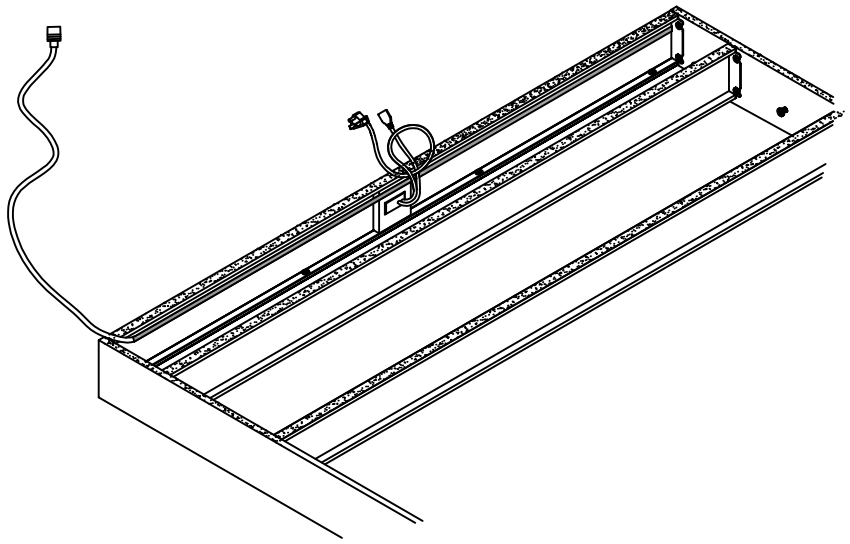


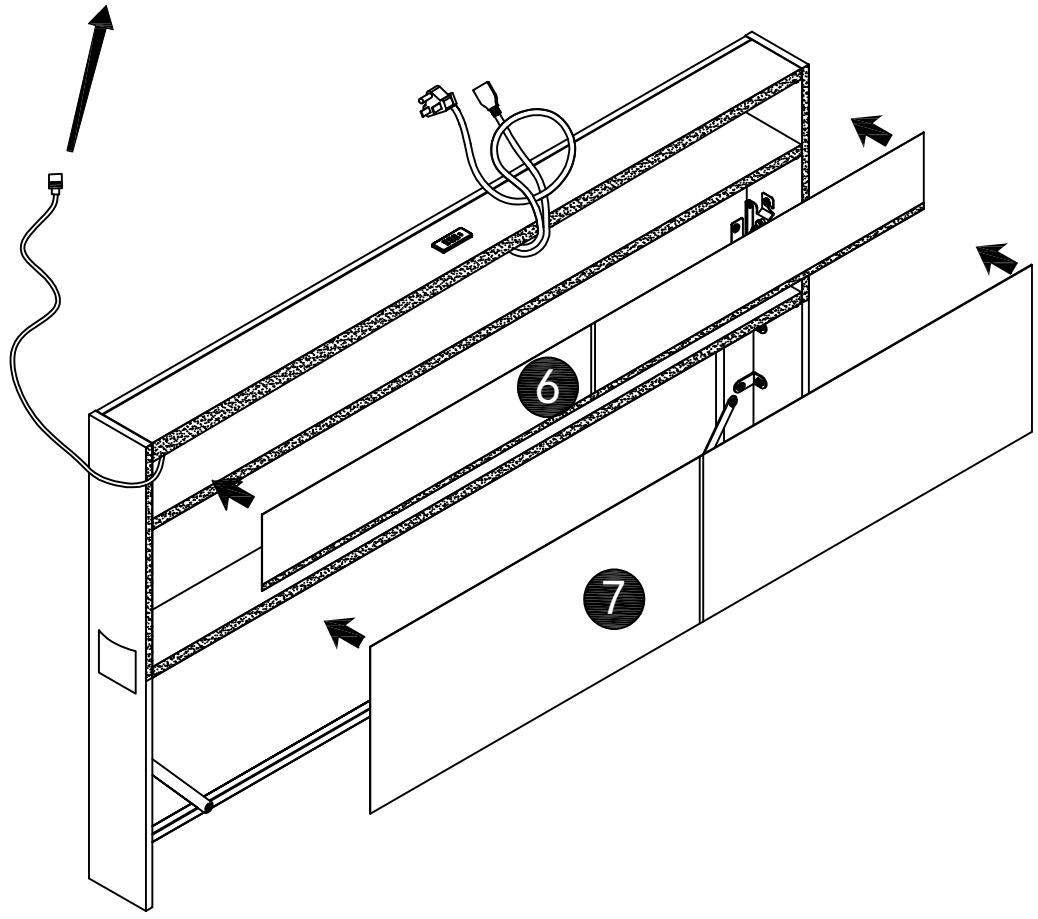
11

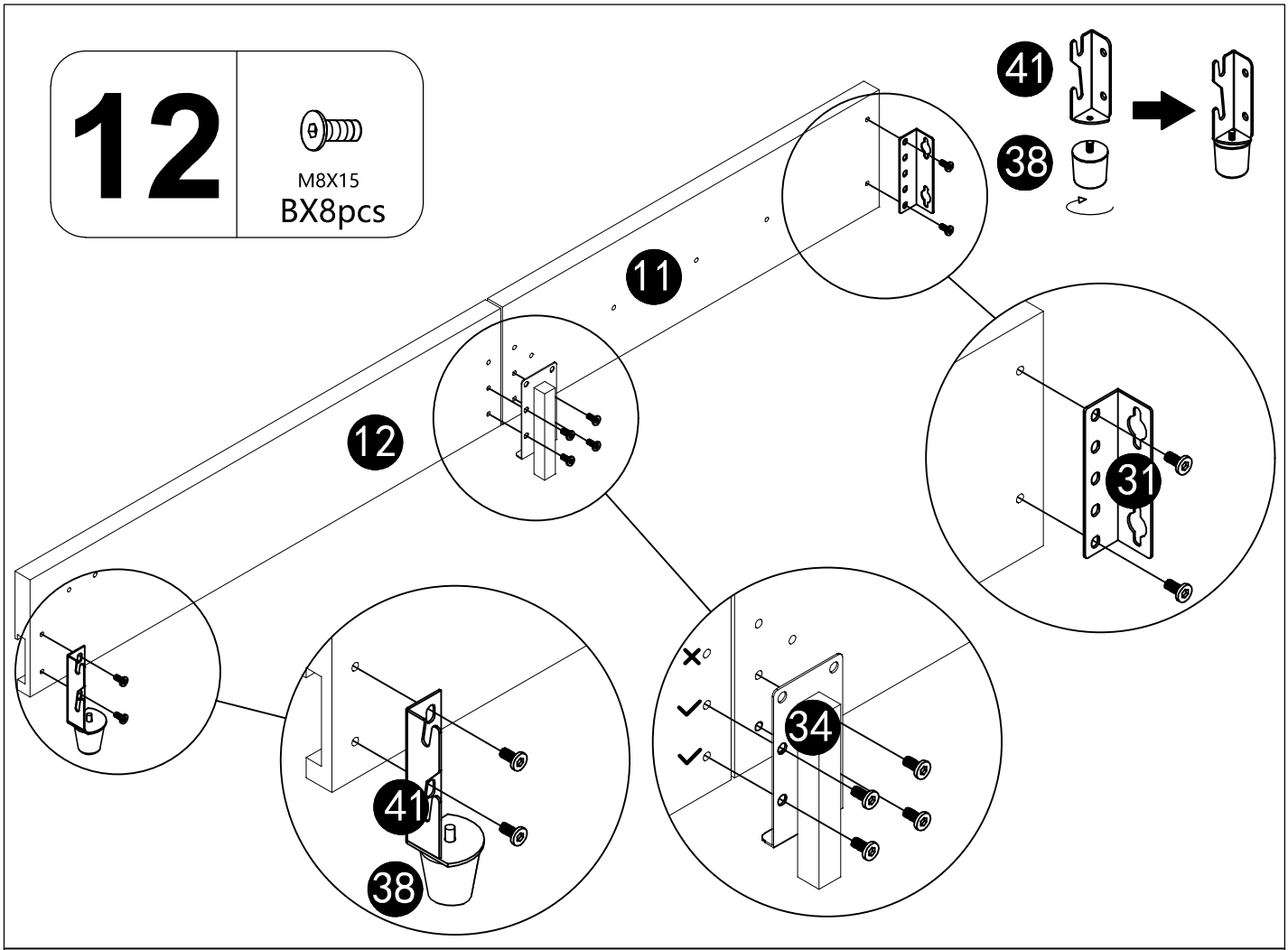


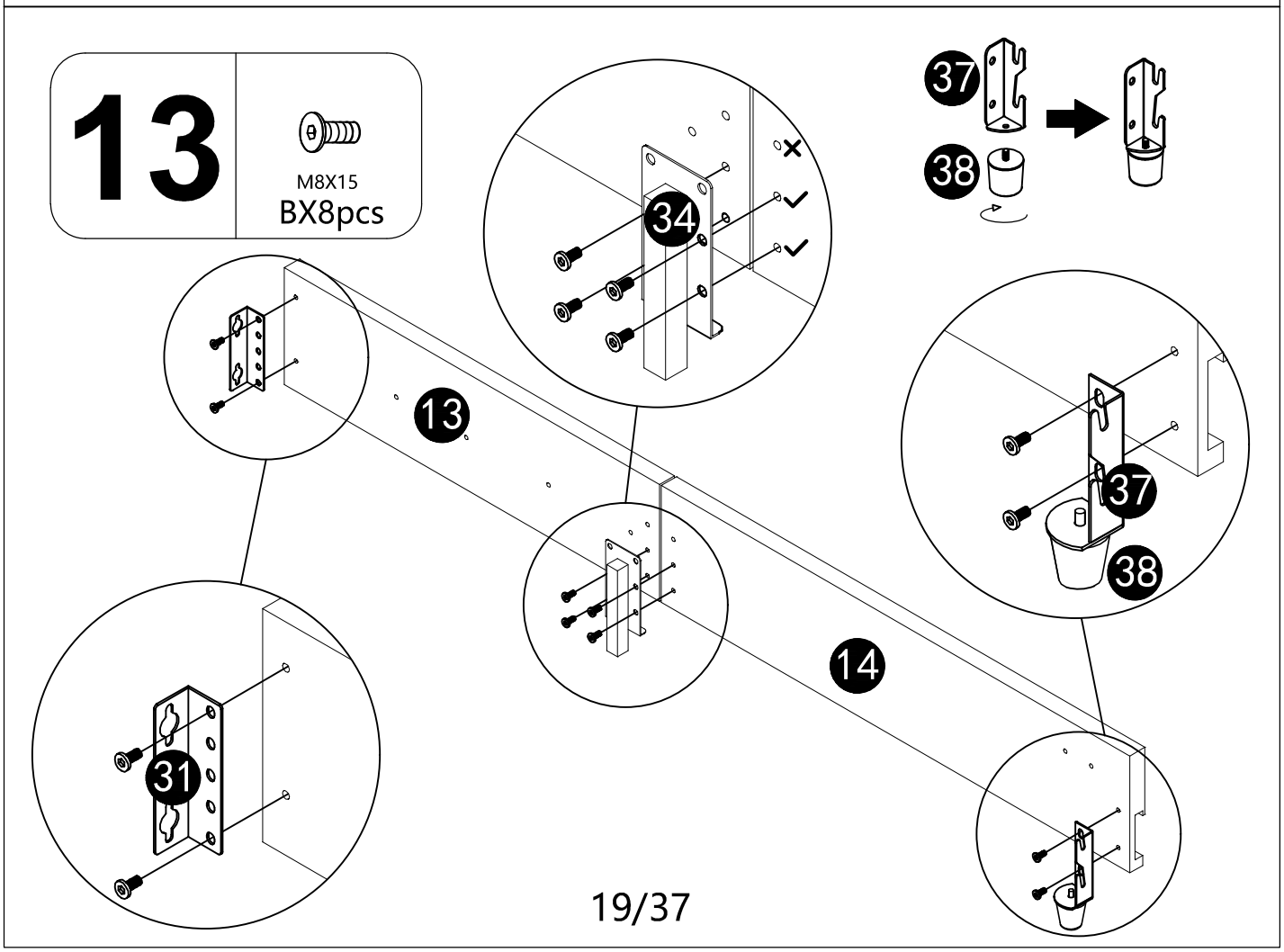



Z light strip
1pc
Pull out
and unfold
light strip




6
7


12
M8X15
BX8pcs
41
38
11
12
31
34
41
38

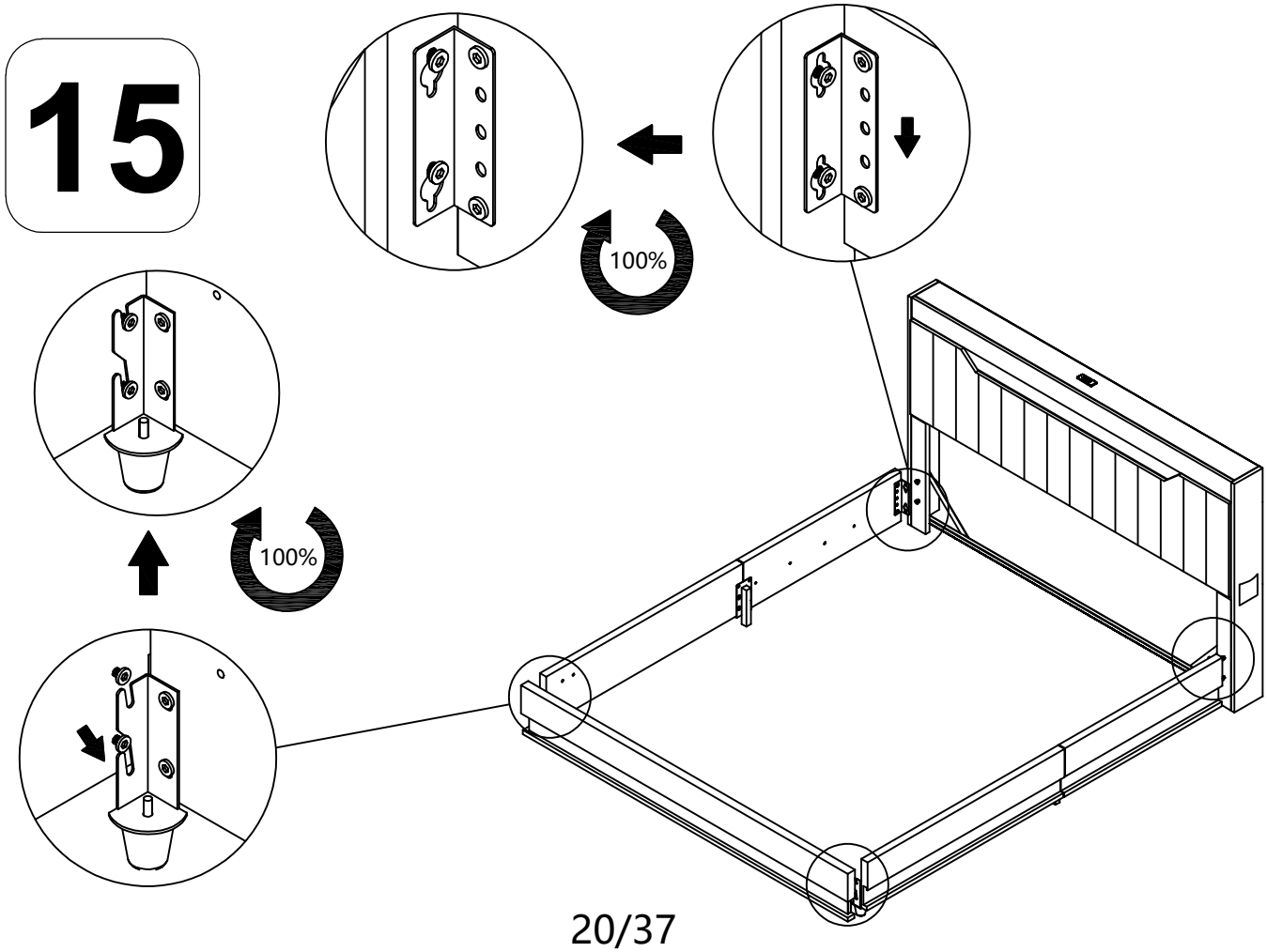

13
M8X15
BX8pcs
37
38
34
13
37
38
31
14

14



M8X20
CX8pcs

15

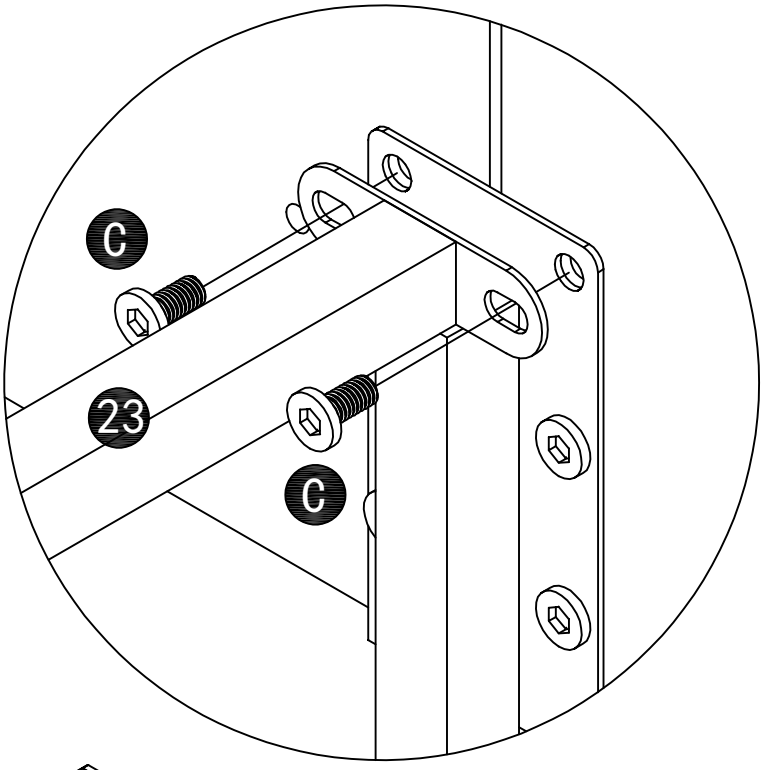


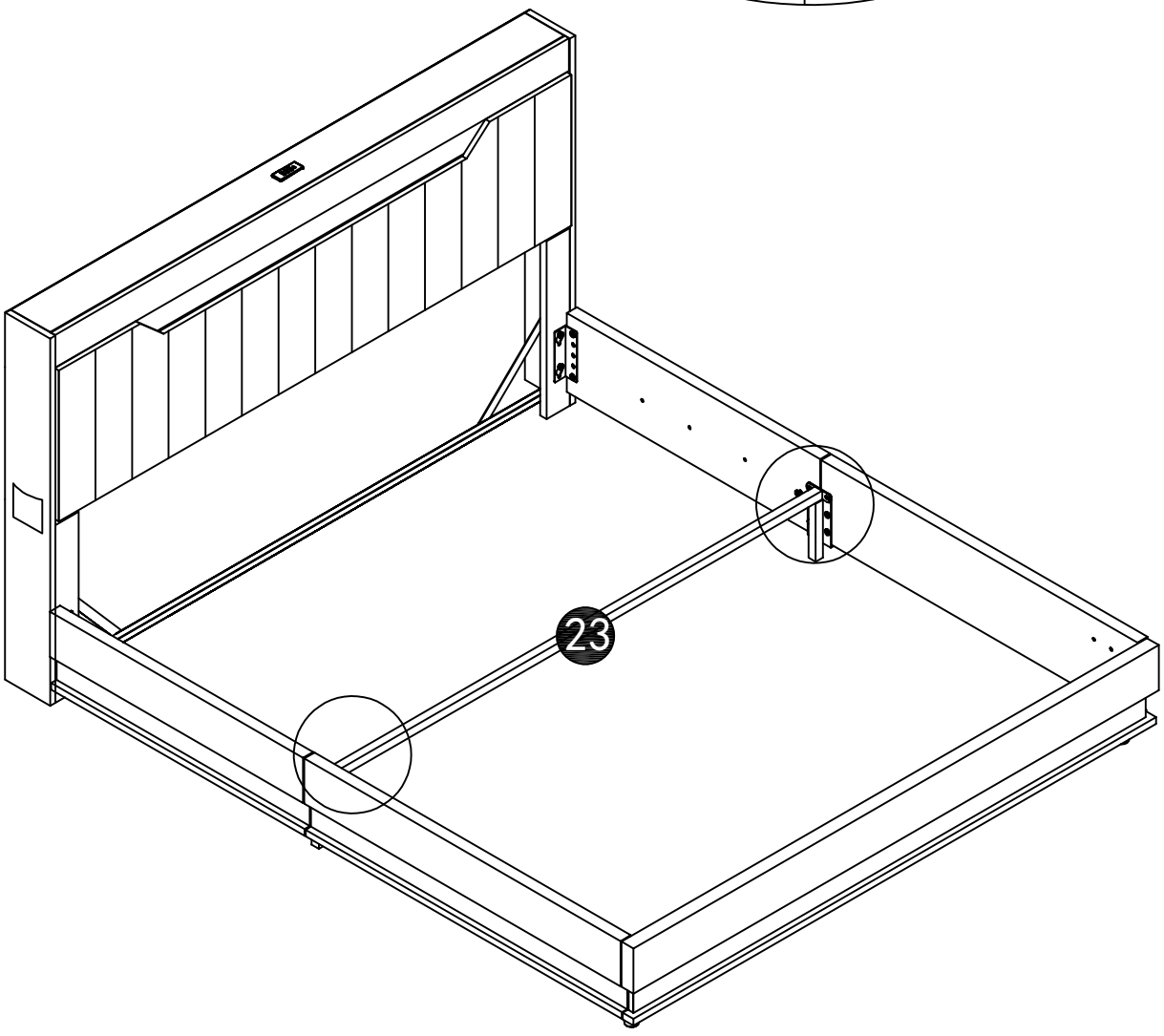
16



M8X20

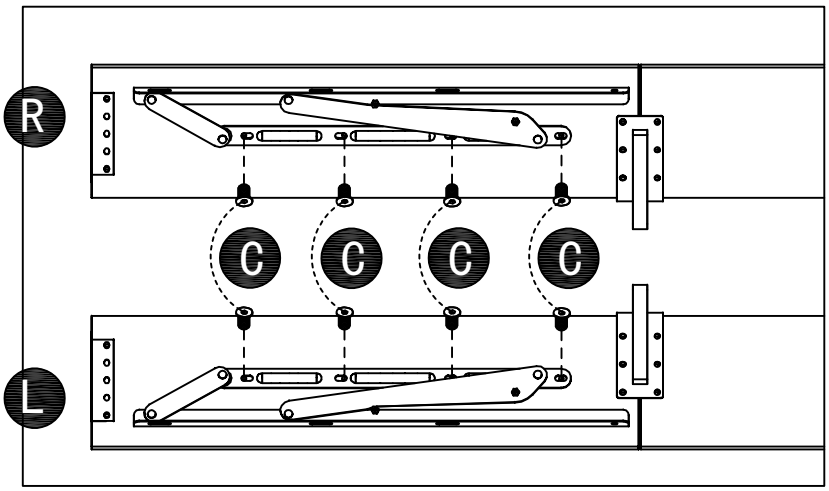
CX4pcs

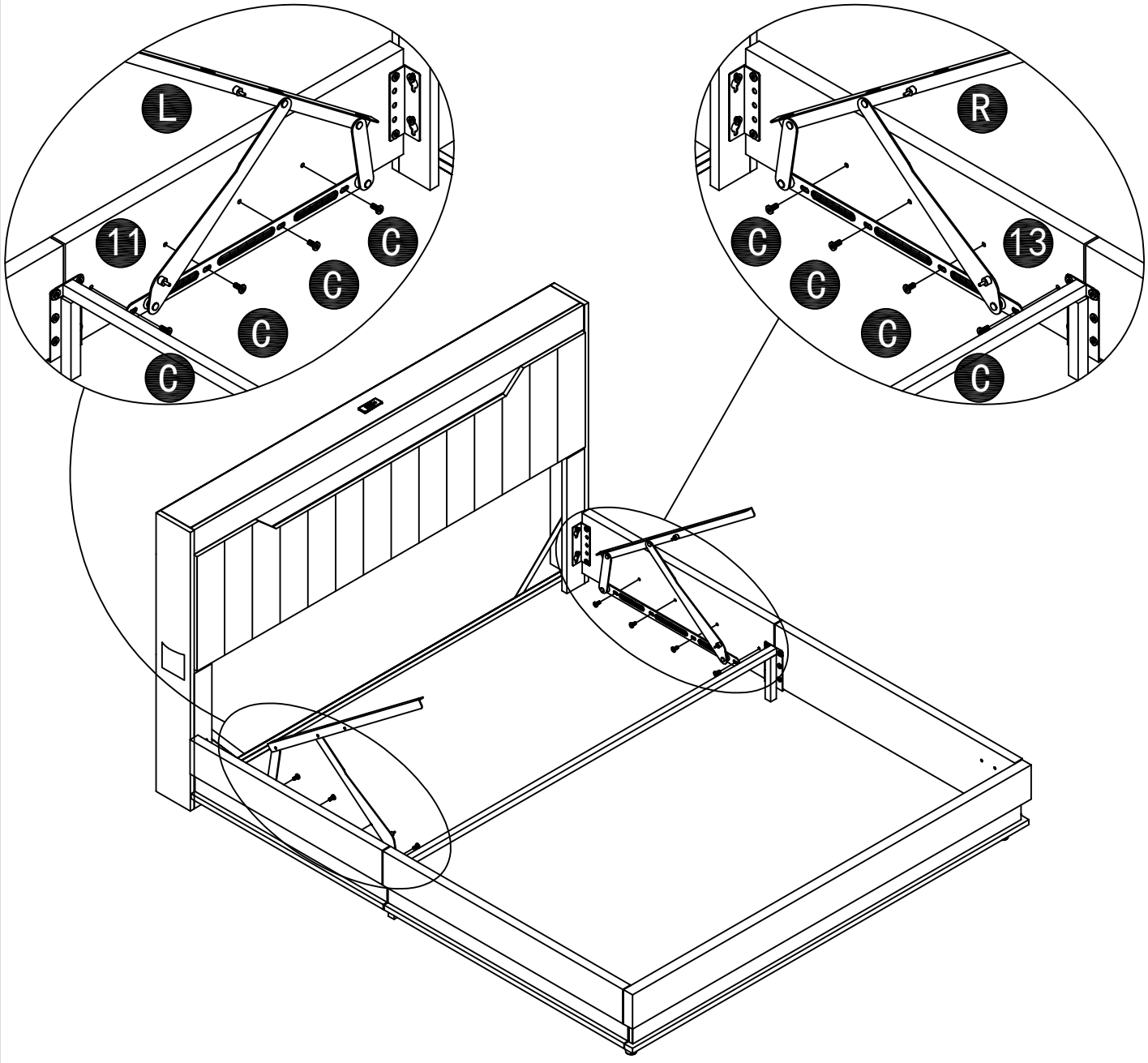




17

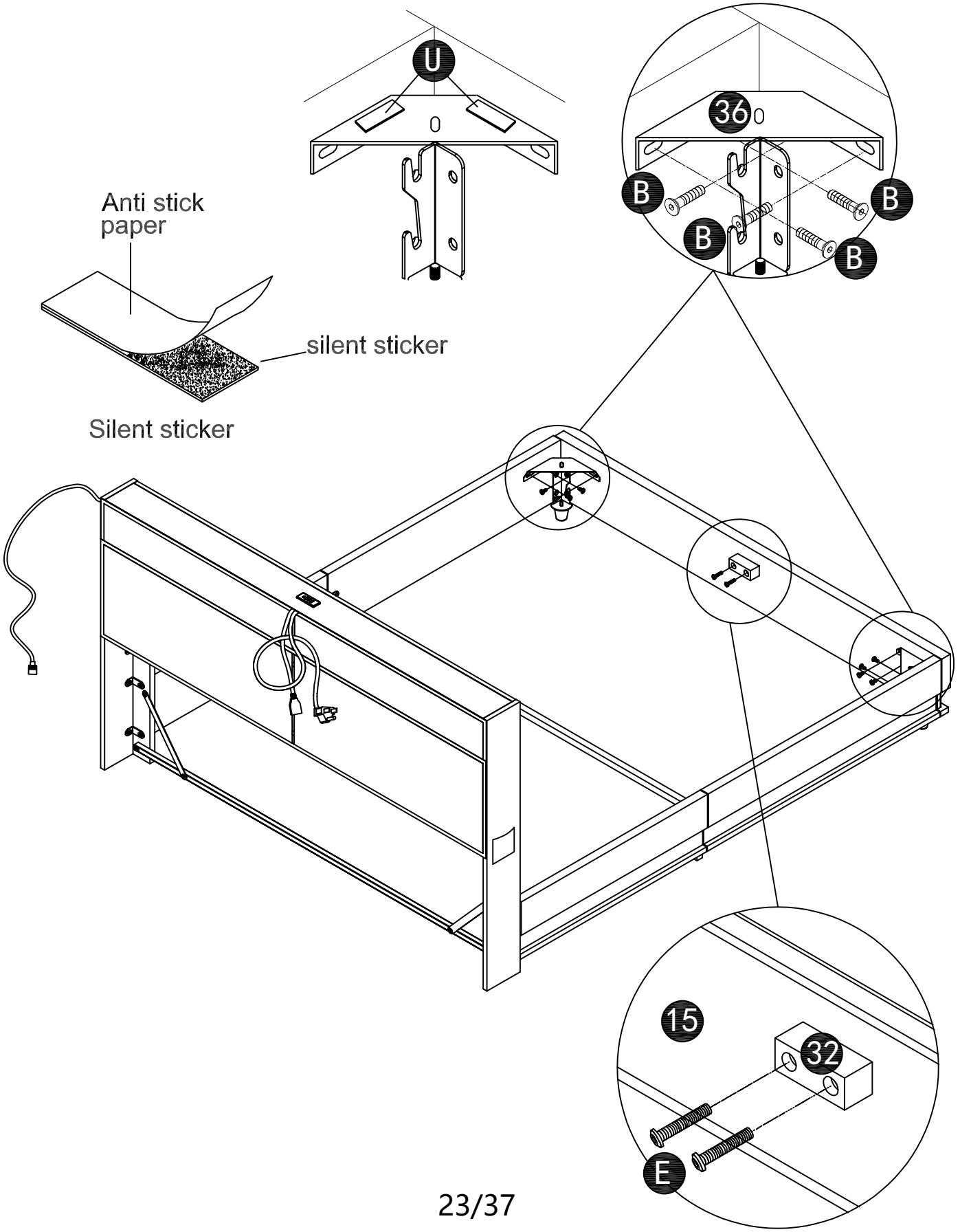
M8X20
CX8pcs





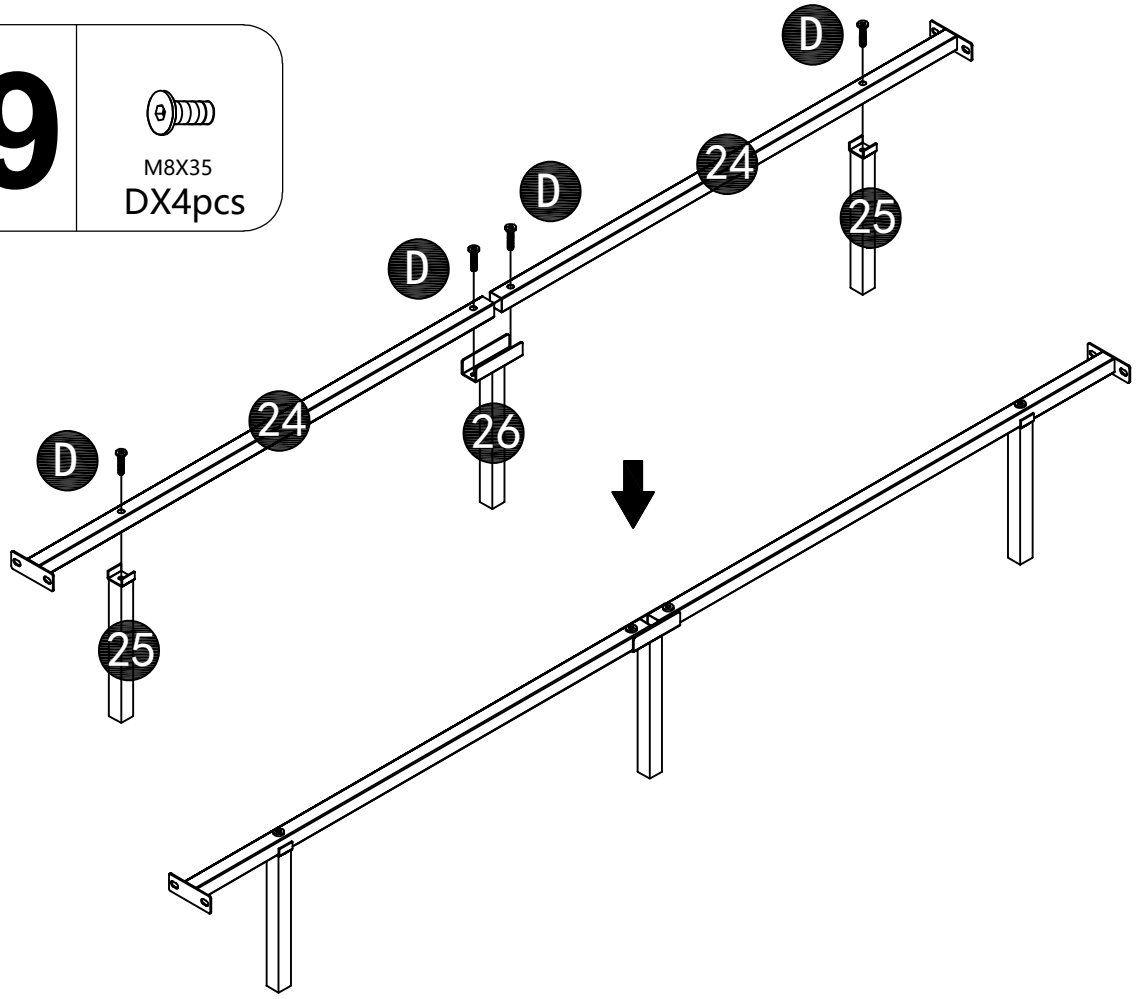
18

M8X15	M8X40	
BX8pcs	EX2pcs	UX4pcs

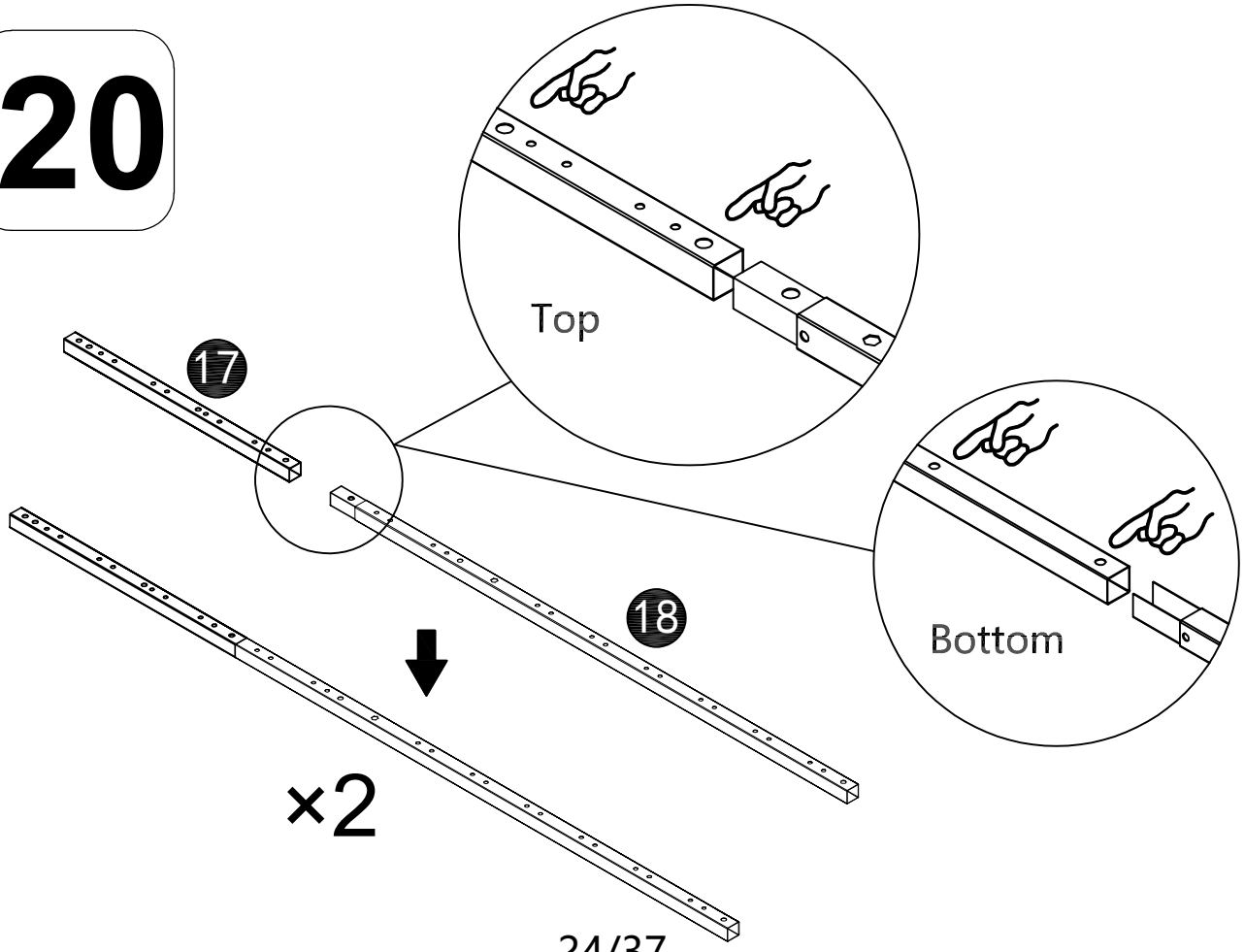


19

M8X35
DX4pcs



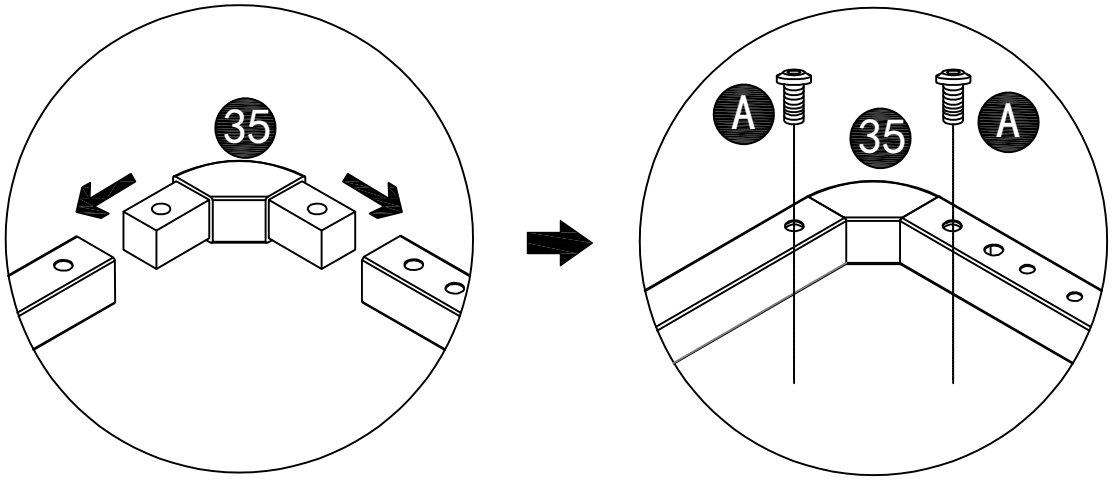
20

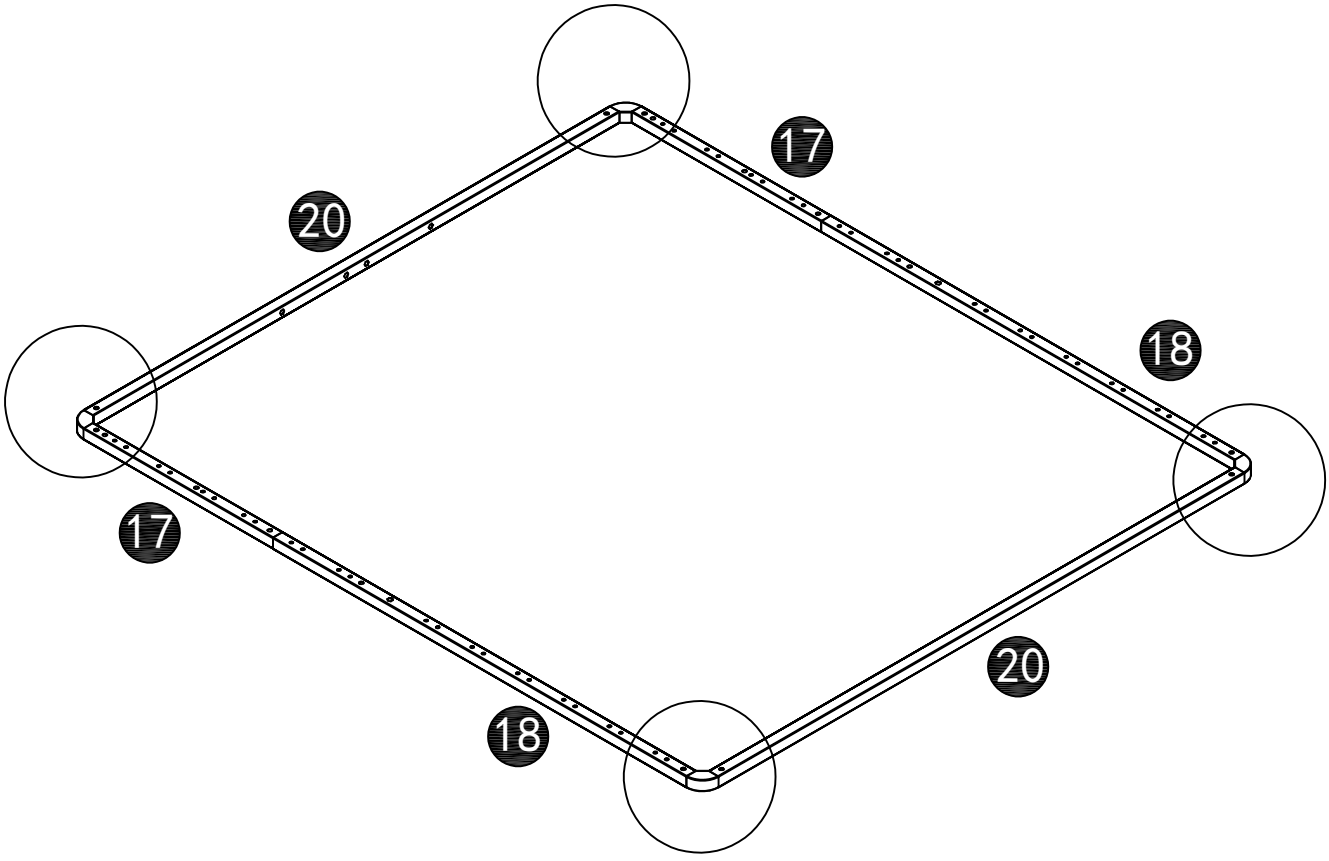


21



M8X12
AX8pcs



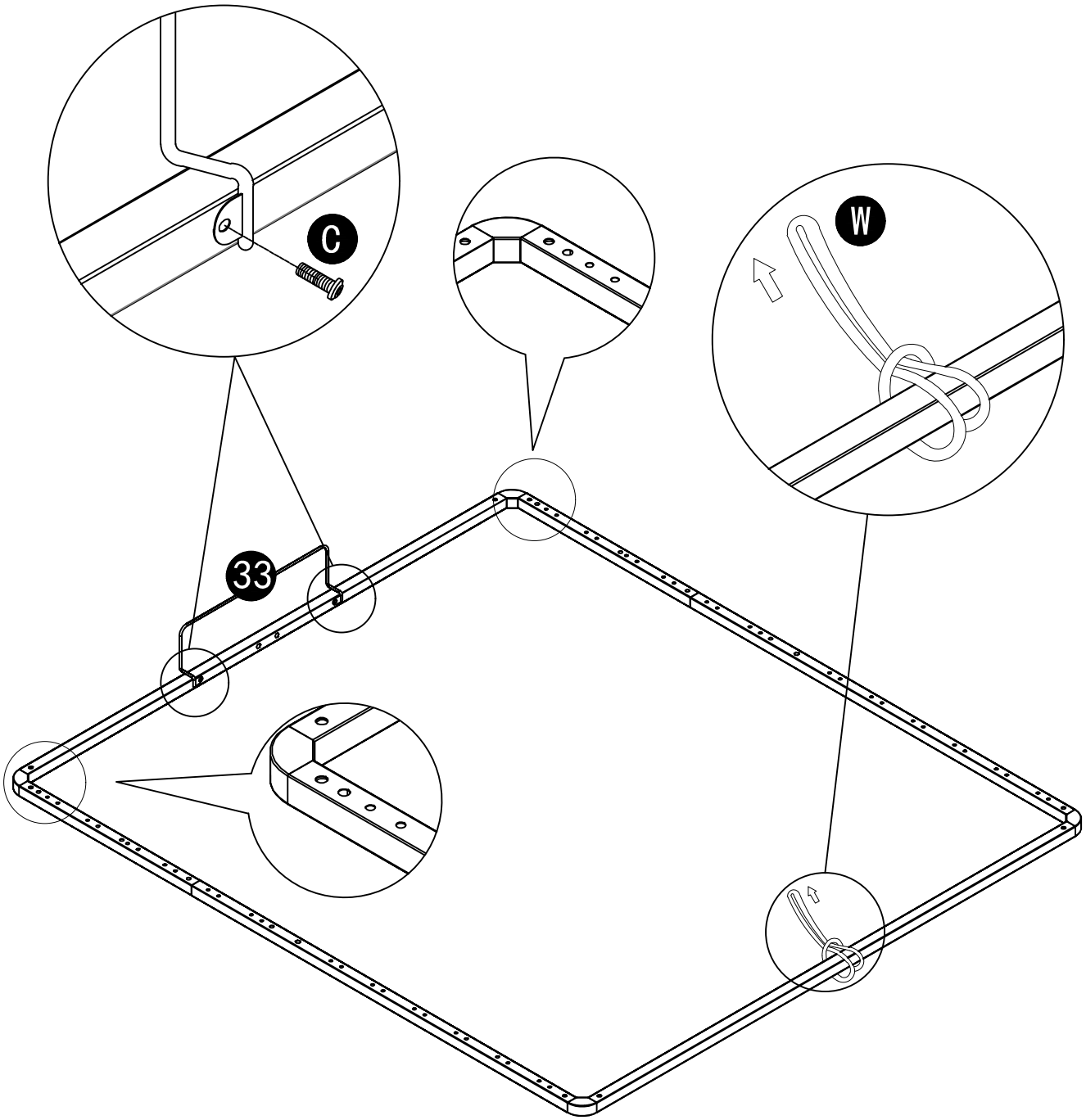


22



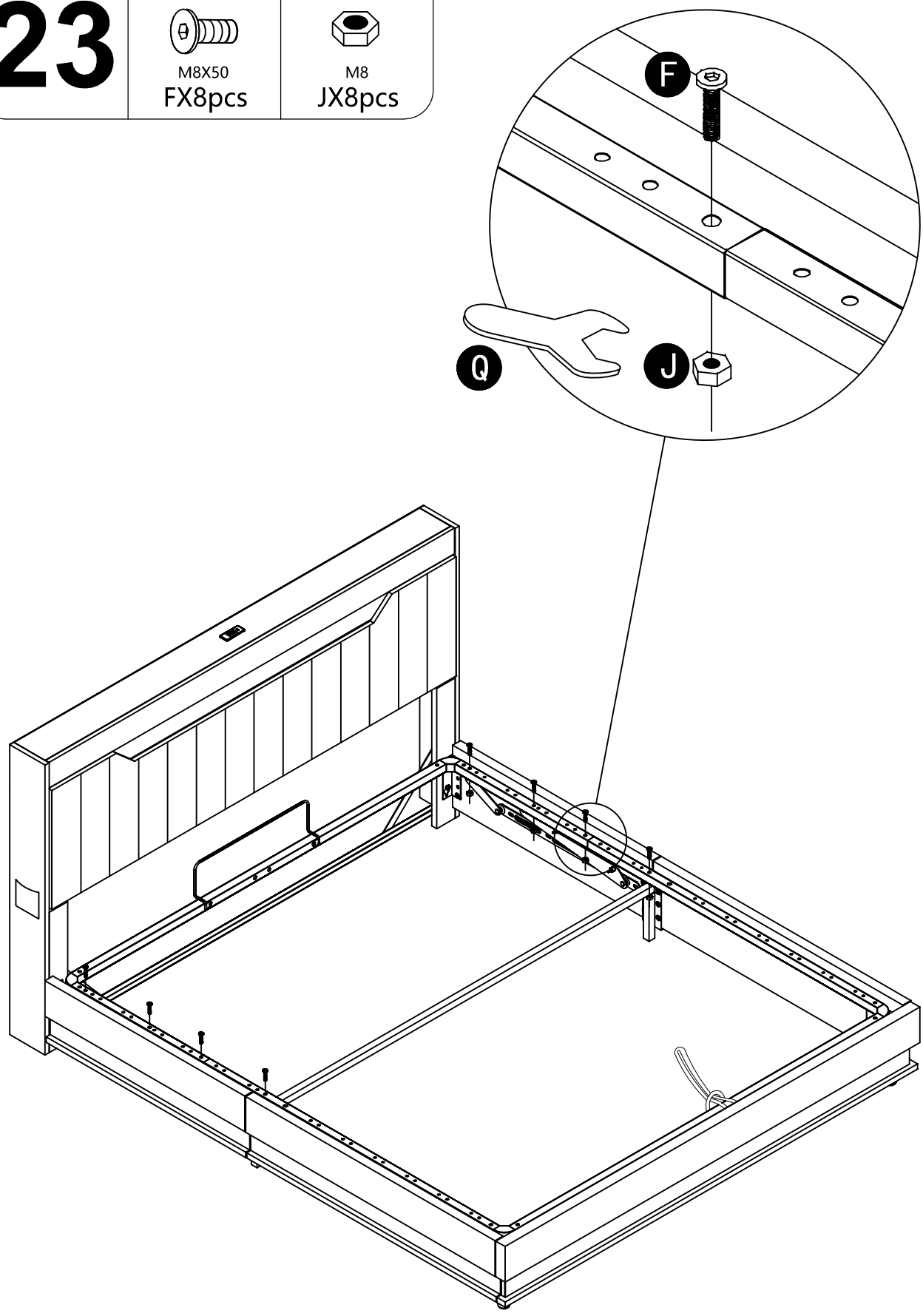
M8X20

CX2pcs



23

M8X50	M8
FX8pcs	JX8pcs

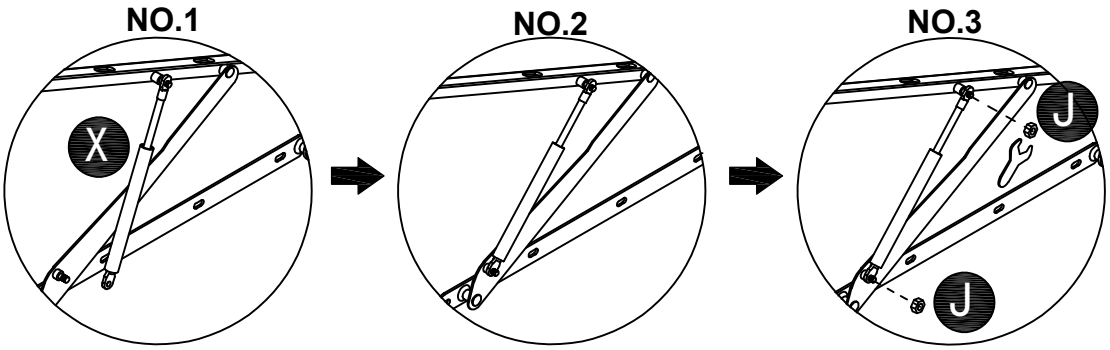


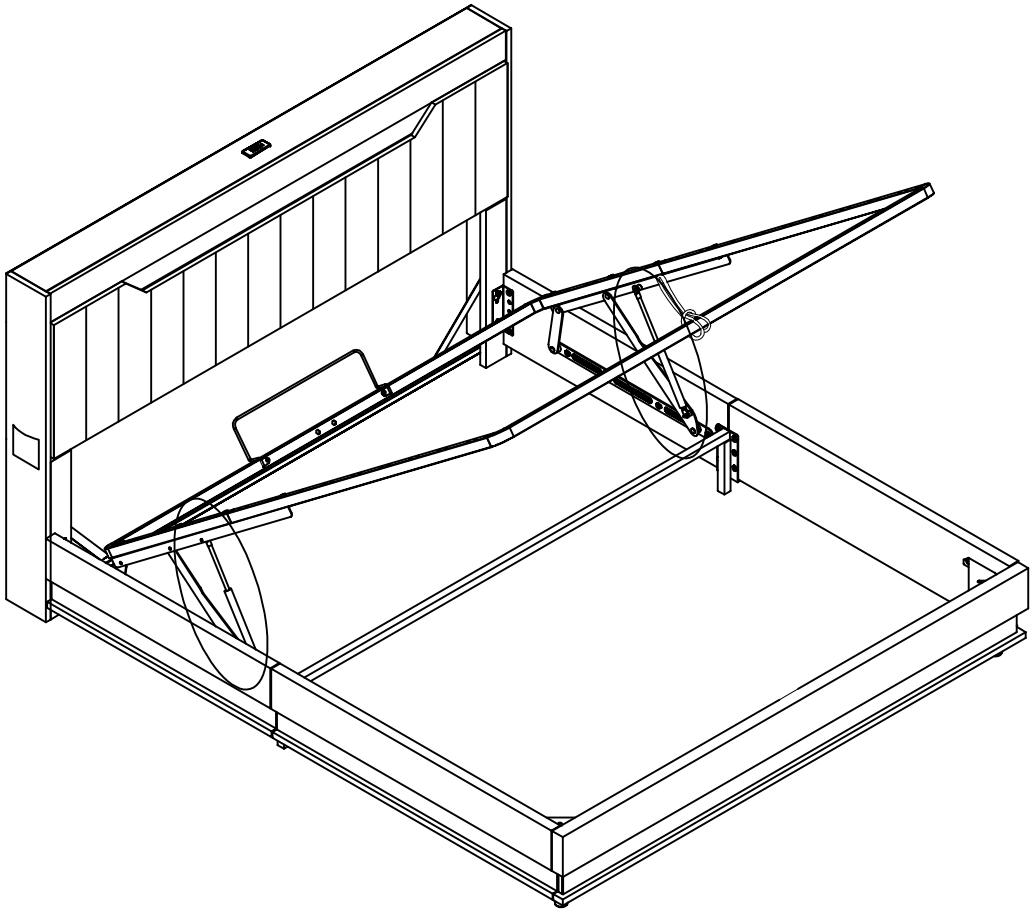
24



M8

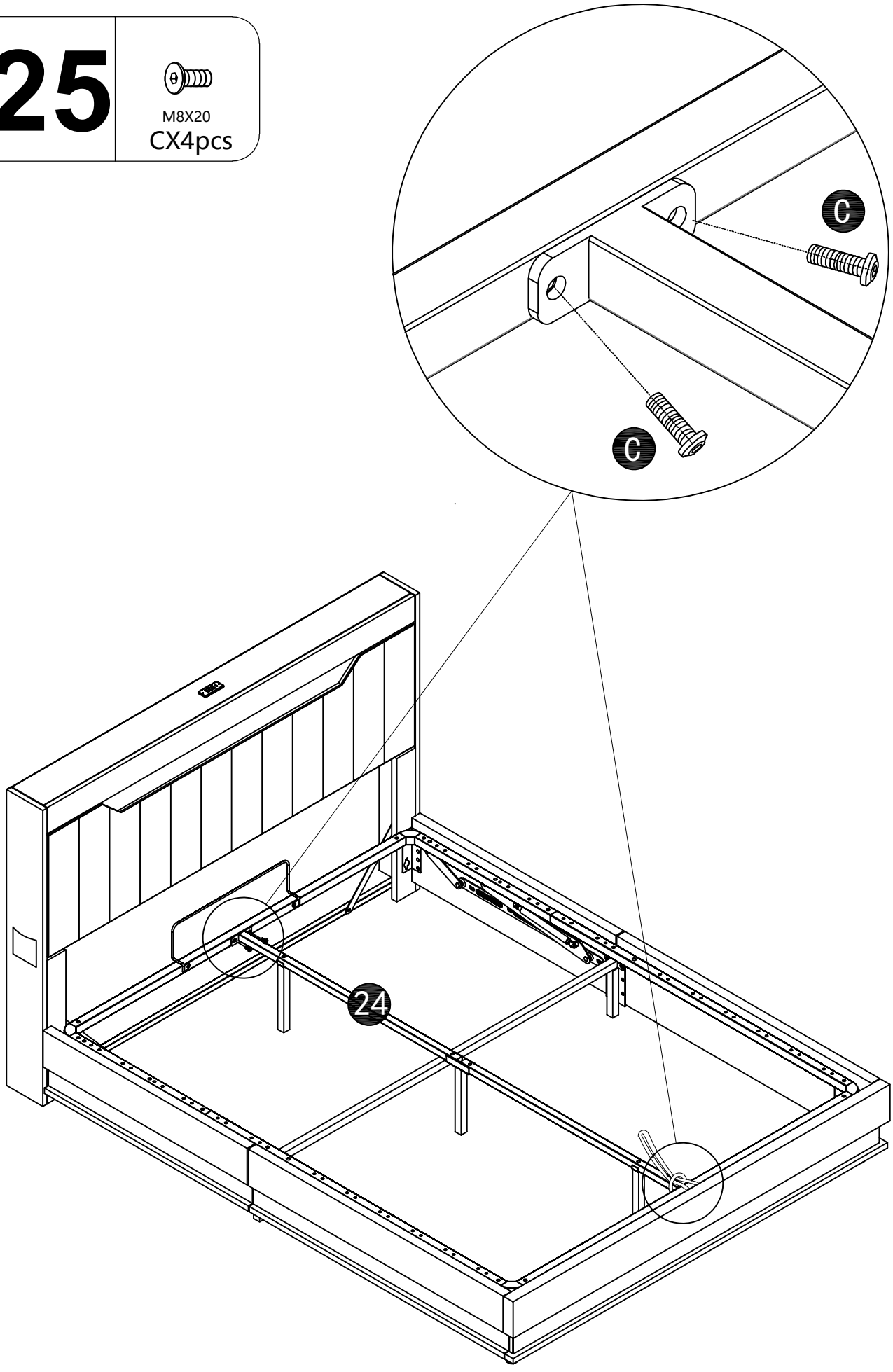
JX4pcs





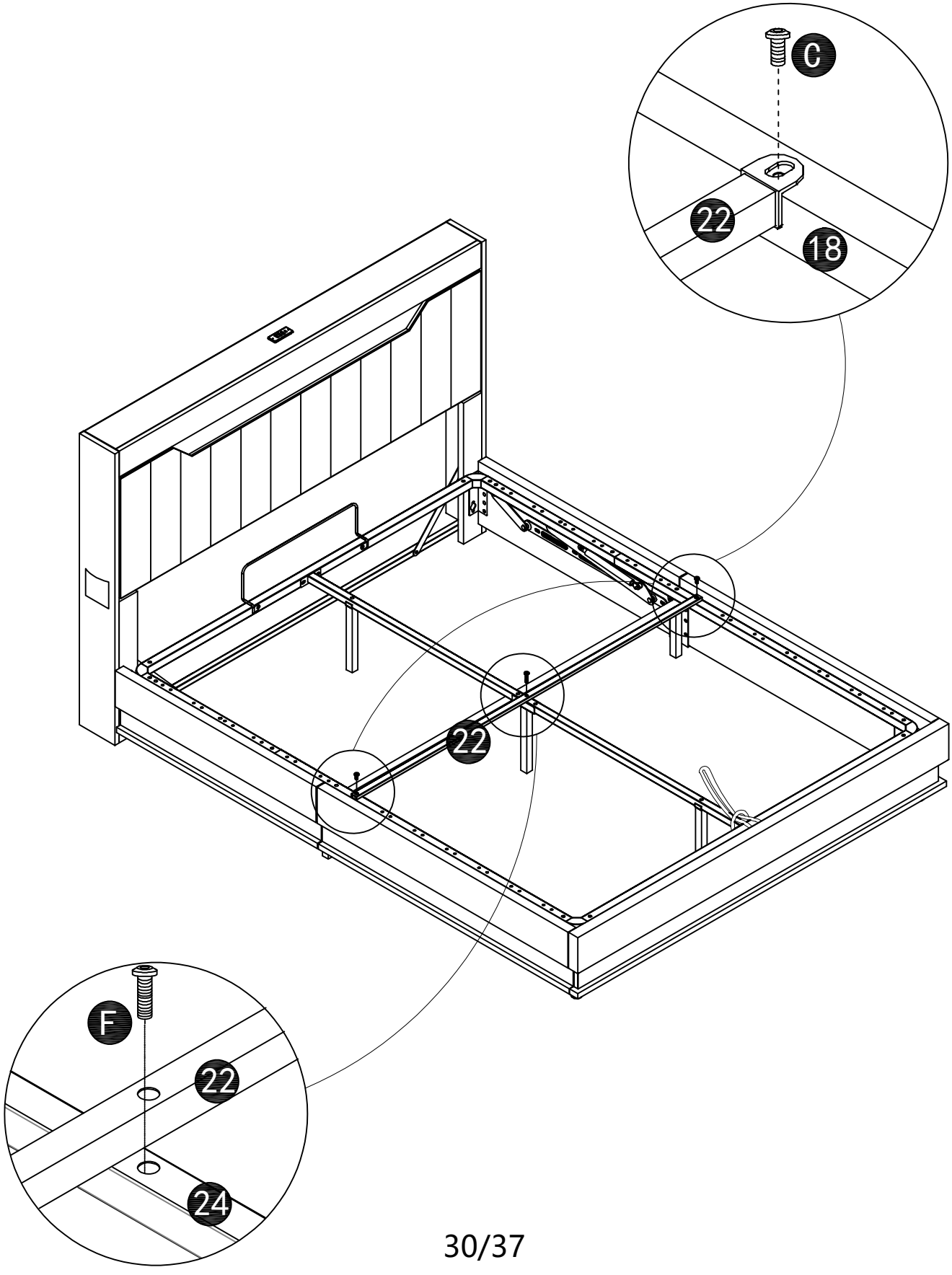
25

M8X20
CX4pcs

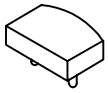


26

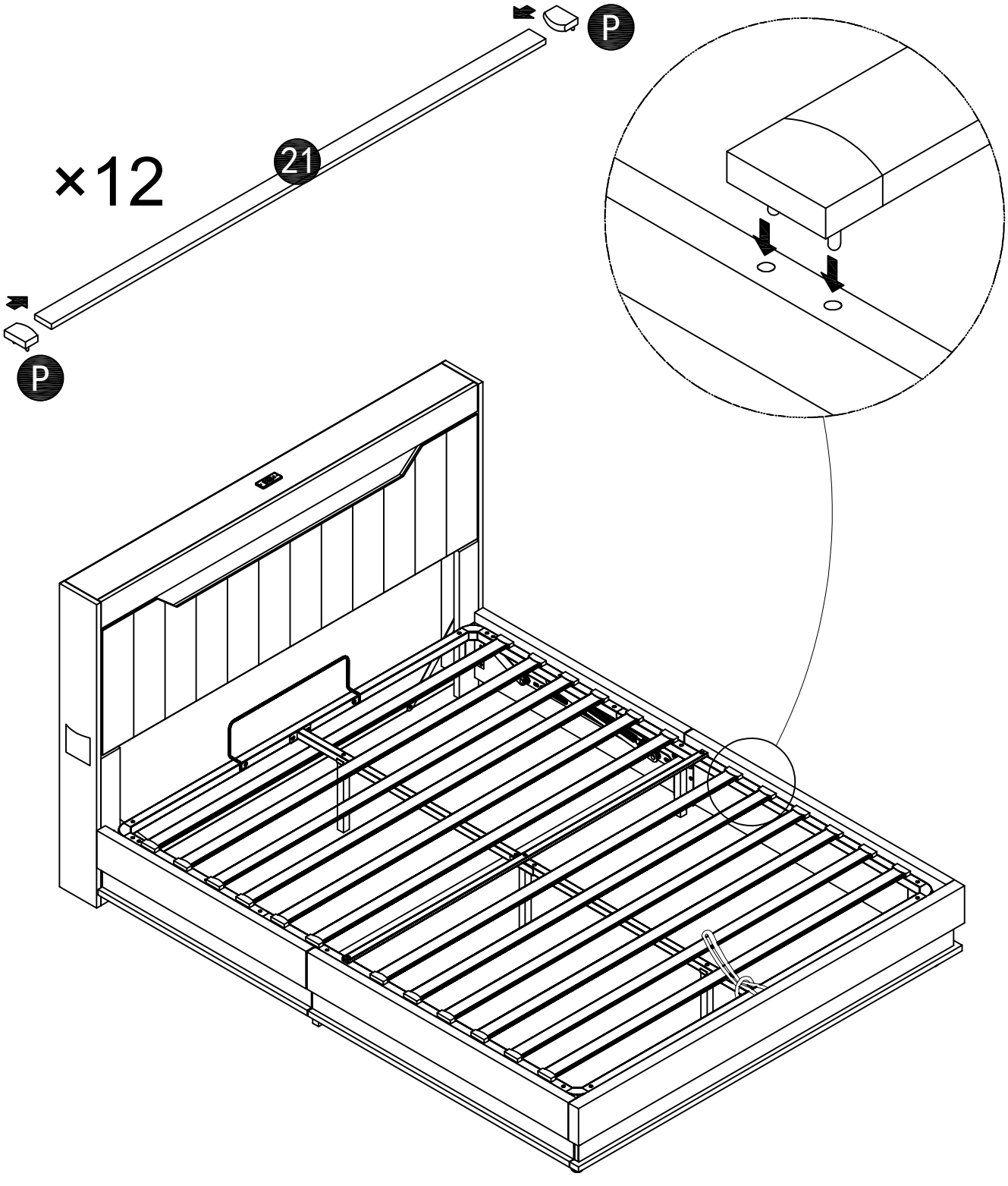
M8X50	M8X20
FX1pcs	CX2pcs



27

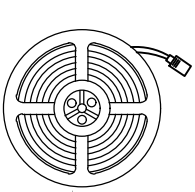


PX24pcs



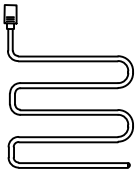
28

T Remote control
1PC

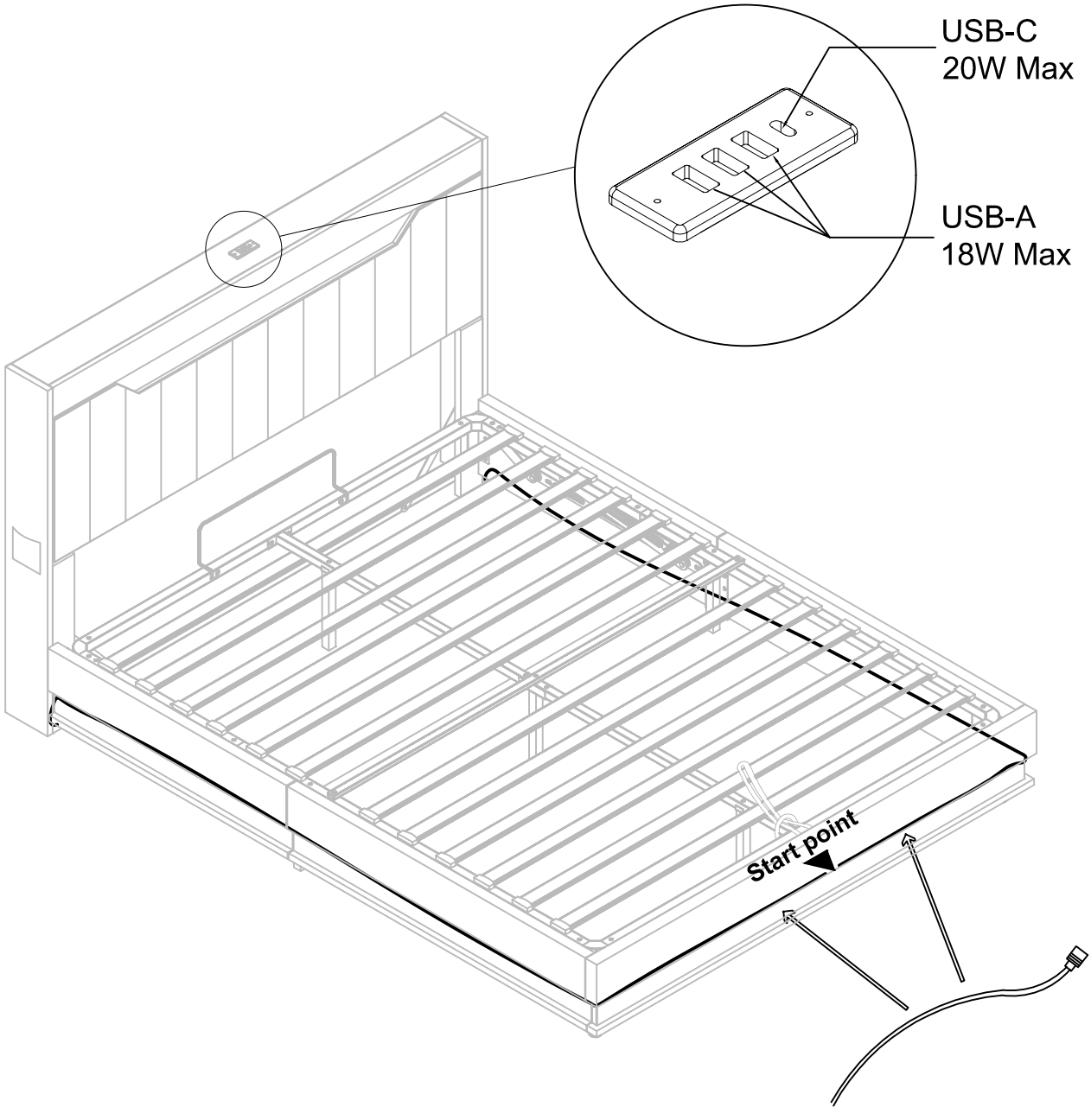


V Long light strip
2PCS

Pull out
and unfold

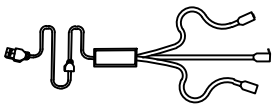


Light strip



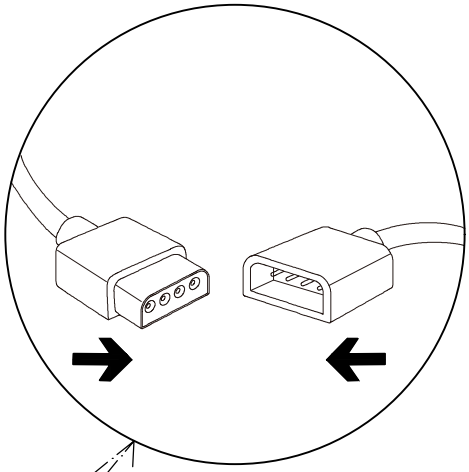
*Stick the light strip onto the Velcro inside the groove
*Kleben Sie den Lichtstreifen auf den Klettverschluss in der Nut
*Collez la bande lumineuse sur le velcro à l'intérieur de la rainure
*Pega la tira luminosa en el velcro dentro de la ranura
*Incollare la striscia luminosa sul velcro all'interno della scanalatura.

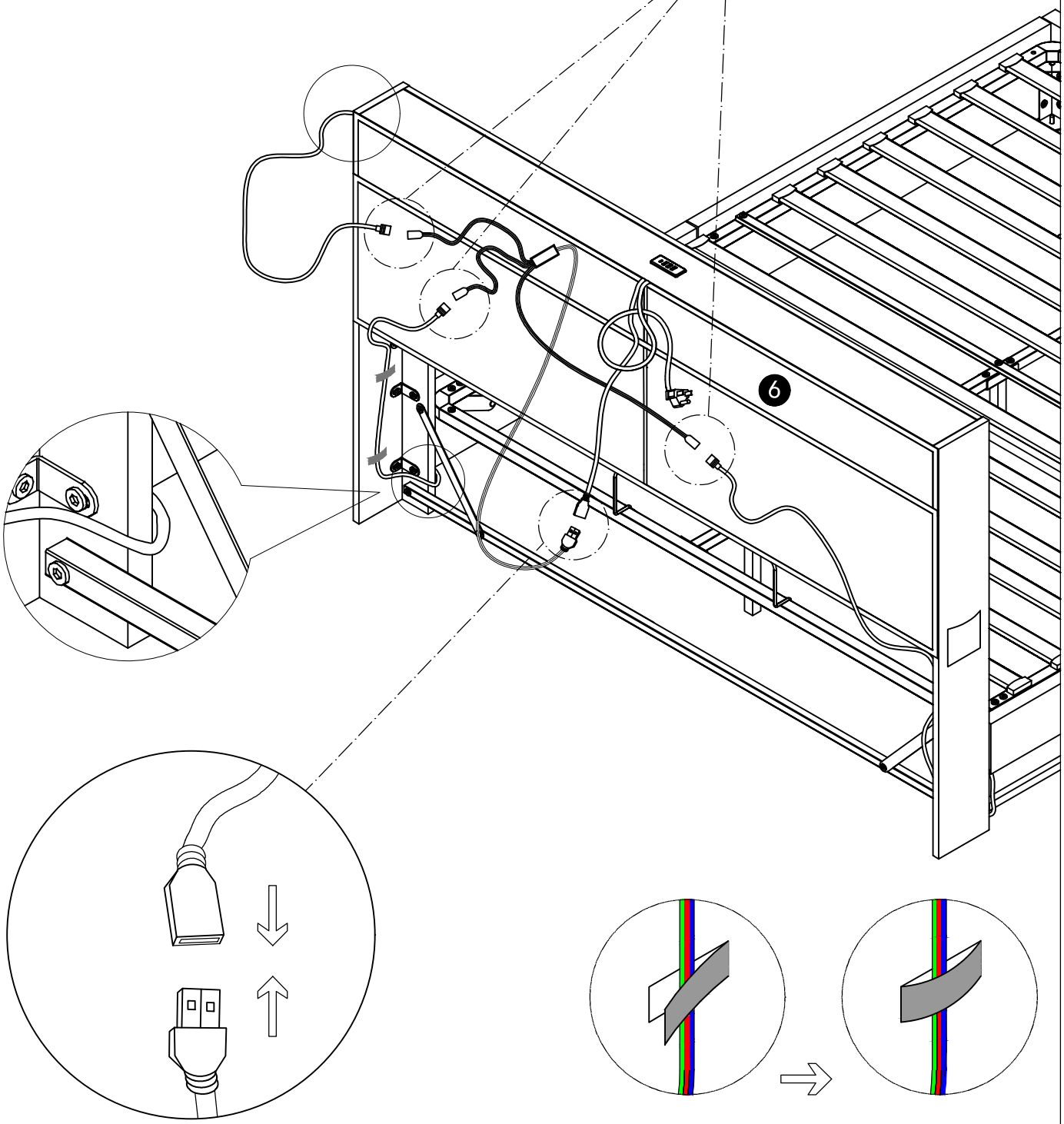
29



S Power cord

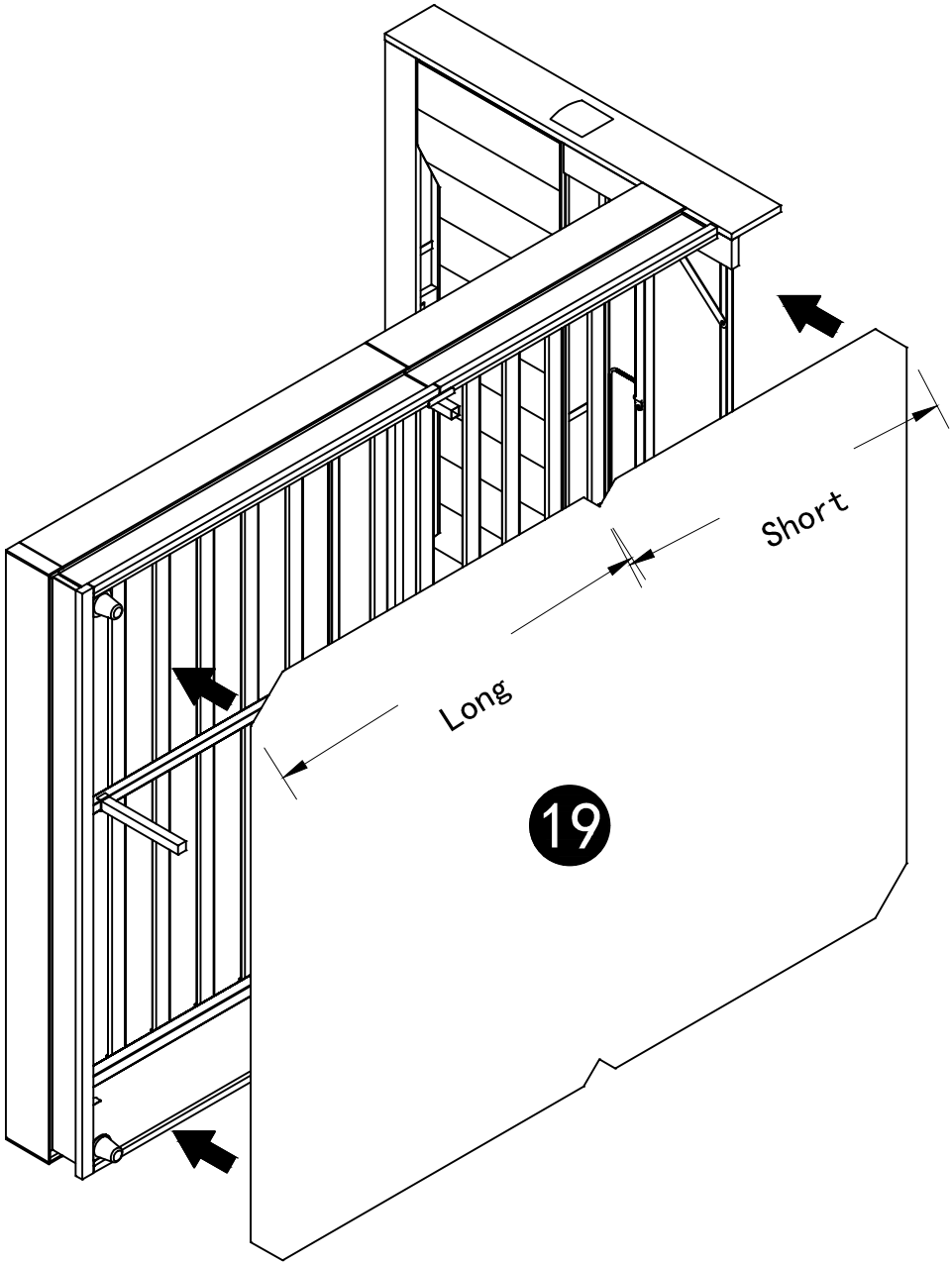
1PC





30

Stick the Velcro of component
19 to the Velcro under the bed



Attestation of compliance Attestation of compliance Attestation of compliance Attestation of compliance

Attestation of Compliance

Declaration No.:	MK23110141P01-E01
Name and address of Applicant:	**Shenzhen Hongzhengyu Technology Co., LTD** Shenzhen baoan district rock street industrial science and technology industrial park of 2 Haitian Ianyu 3 5 floor of A
Name and address of Manufacturer:	**Shenzhen Hongzhengyu Technology Co., LTD** Shenzhen baoan district rock street industrial science and technology industrial park of 2 Haitian Ianyu 3 5 floor of A
Product name:	**RGB package**
Rated：	DC5V
Product model(s):	HZY-5050RGB-30D-90R-DC5V, HZY-5050RGB-30D-30R-DC5V, HZY-5050RGB-60D-60R-DC5V, HZY-5050RGB-60D-180R-DC5V, HZY-5050RGB-18D-18R-DC5V
Product trademark:	N/A

This Attestation of Compliance confirms that the product meets the requirements of the following standard.

BS EN IEC 55015:2019+A11:2020
IEC 61547:2020
BS EN IEC 61000-3-2:2019
BS EN 61000-3-3:2013/A2:2021

The Attestation of Compliance has been carried out in accordance with individual rules and conditions agreed with the applicant. Evaluation has been carried out in accordance with:

Test report(s) No.:	MK23110141P01-E01
Test conducted by:	TMC Testing Services (Shenzhen) Co., Ltd.
Declaration issue date:	December 5, 2023

Notes:

This Attestation of Compliance is issued according to the Great Britain legislation Electromagnetic Compatibility Regulations 2016(SI 2016 No. 1091). It confirms that the listed products complies with all essential requirements of the Regulations and applies only to the sample and its technical documentation to TMC Testing Services (Shenzhen) Co., Ltd. for testing.

After preparation of the necessary technical documentation (which must be kept for up 10 years after the product is placed on the GB market) as well as the UK Declaration of Conformity, the required UKCA marking can be affixed on the product. Other relevant Regulations have to be observed.

TMC Testing Services (Shenzhen) Co., Ltd.
t:86-755-86642861 cert@tmc-lab.com www.tmc-lab.com
1st Floor, Block A1, Zone A, Xinshidai Gongrong Industrial Park, No. 2, Shihuan Road, Shiyan Street, Baoan District, Shenzhen, China

Bauart geprüft TMC Product Safety Type approved

Lab Director
Vivian Jiang

KeySense Testing & Certification International Co., Ltd.
1-3F,Lab Building, No.29 District, Zhongkai Hi-Tech Industrial Development Park, Huizhou, Guangdong, China

Tel:0752-3219929
Fax:0752-3219929
http://www.kst-cert.com

Technical Compliance Statement

Certificate No.: KST240304L008Q01

Report No.: KST240304L008Q01

The following product has been tested by us with the listed standards and found in Compliance with the council LVD directive 2014/35/EU. It is demonstrative for the Compliance with this LVD Directive.

Holder:	**DONGGUAN BAIYOU ELECTRONIC CO LTD**
Address:	**2F A Building, Wufeng Industrial, Jintan Road, Danwu Shijie Town, Dongguan, Guangdong**
Product:	**USB CHARGER**
Model Name:	**BY213-TD04-C**
Trade Name:	**N/A**

Test Standard	
EN 62368-1:2014+A11:2017	Audio/video, information and communication technology equipment Part 1: safety requirements

CE

Signature:
Name: Tony Xu
Position: General Manager
Date: Apr. 26, 2024

The statement is based on single evaluation of one sample of above mentioned product. It does not imply an assessment of the whole production and does not permit the use of the test lab. Logo.

GB – NOTE: The battery in the remote control requires you to purchase and install it yourself.
Model: CR2025 3.V

DE – HINWEIS: Die Batterie in der Fernbedienung müssen Sie selbst kaufen und installieren
Modell: CR2025 3.V

FR – REMARQUE : la pile de la télécommande doit être achetée et installée par vos soins.
Modèle : CR2025 3.V

IT – NOTA: la batteria del telecomando deve essere acquistata e installata autonomamente.
Modello: CR2025 3.V

ES – NOTA: La pila del mando a distancia debe comprarla e instalarla usted mismo
Modelo CR2025 3.V

①



②



③



④



⑤



⑥



⑦



⑧

